PART NAME	TERMINAL BOX	PART NO.	DS - OOO - 5628	(Replace "OOO" withmaterial type. See chart below)	REVISON DATE	2012.12.21

<BODY>

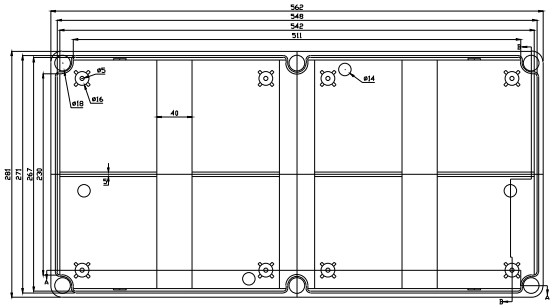

BODY-TOP

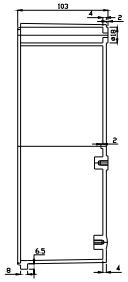

SECTION B-B

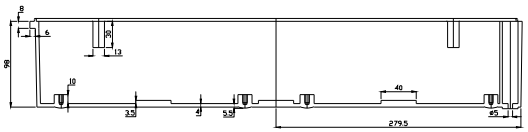

SECTION A-A

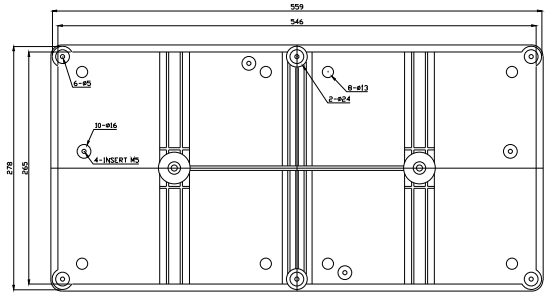

BODY-BOTTOM

<COVER>

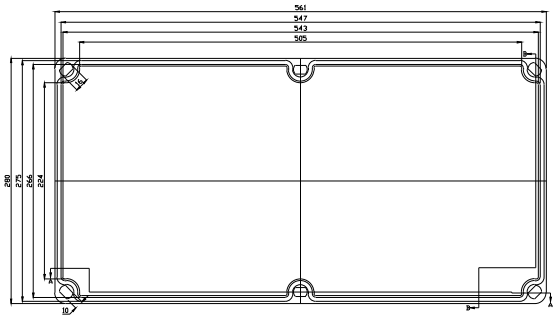

COVER-BOTTOM

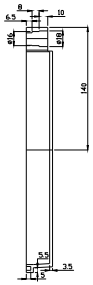

SECTION B-B

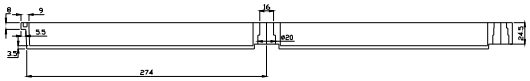

SECTION A-A

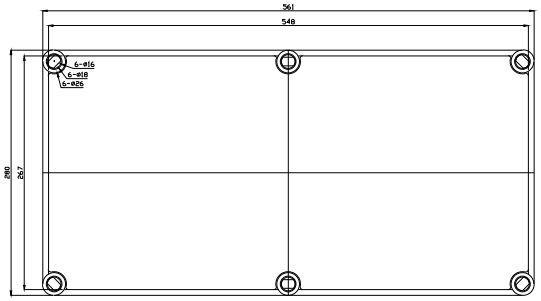

COVER-TOP

NOTES:
1. A box includes 4 pcs of bolts.
2. Boxes designed to meet these standards:
   TUV - IP 67 for all material
   UL - Type 4X for PG/PT, PCG/PCT
   ROHS & REACH compliant

Tolerance:
All dimensions have ± 1mm

The information contained in this drawing is the sole property of DSE,Inc. Any reproduction in part or whole without the written permission of DSE,Inc. is prohibited. DSE,INC.

PART NO.	MATERIAL		U S E
	BODY	COVER	
DS-AG-5628	ABS	ABS	INDOOR
DS-AT-5628	ABS	CLEAR PC	INDOOR
DS-PG-5628	ABS/PC	ABS/PC	INDOOR
DS-PT-5628	ABS/PC	CLEAR PC	INDOOR
DS-PCG-5628	PBT/PC	PBT/PC	OUTDOOR
DS-PCT-5628	PBT/PC	CLEAR PC	OUTDOOR