SWITCHES PLUS COMPONENTS

Beacons & Alarms

2027



Industrial electrical, automation and control products, including hard-to-source and specialist components, backed by technical expertise.

Switches Plus Components

SWITCHES PLUS COMPONENTS

Switches Plus Components is an Australian-owned specialist supplier of industrial electrical, control and automation products, supporting customers across Australia.

We've been working with switchboard builders, OEMs, machine builders, industrial electricians and engineers for more than 40 years, supporting projects where product selection, system integration and long-term performance all matter.

We act as the Australian distributor for over 40 suppliers, with over 10,000 items on our wesbite, and 5,000+ products stocked in our warehouse from leading global manufacturers, known for their quality, reliability and performance in industrial applications.

What We Do

We supply a broad range of industrial electrical, automation and control components suited to your application requirements, whether standard or specialist.

Our role extends beyond supplying part numbers. We focus on solving application challenges, ensuring product decisions align with system design, operating conditions and long-term performance requirements.

Access Specialist and Hard-to-Source Products

Not all projects align with standard, catalogue-based supply. Switches Plus supports applications where system constraints, integration requirements and operating conditions influence product selection. This includes sourcing specialist and hard-to-source components where only specific or niche products will meet the requirements of your application.

Work with a Technically Informed Team

Our team understands the industries our customers work in and how those environments shape product requirements. They work alongside you to provide practical technical input, so product decisions are based on what will perform in your application, not just what's available.

Industries and Applications

Switches Plus Components serves a wide range of customers and industries. Our customers include electrical contractors, switchboard builders, machine builders (OEMs), engineers and system integrators who work across many industries including:

- Defence
- Industrial automation
- Manufacturing plants
- Mining operations
- Utilities
- Infrastructure projects
- Renewable Energy
- Electrical Contractors

These are environments where product selection, technical input and operating conditions directly influence system performance and service life.

Our Mission

We make it easier for our customers to get the right industrial electrical, automation and control products for their application, so they can deliver reliable systems.

Our Vision

To contribute to reliable, well-performing industrial systems across the industries we support.

How We Work

We work from your application requirements
Product selection is guided by how your system is designed, built and expected to perform.

We focus on what will work in your application
Decisions are based on system requirements, operating conditions and long-term performance, not just availability.

We bring practical technical input
Our team understands the industries you work in and provides input that reflects how systems are built, installed and used.

We source beyond standard options when needed
We source components suited to your application, not limited to standard product ranges.

We work alongside you throughout the project
We respond quickly, communicate clearly and work with you to keep things moving.

National Coverage

Switches Plus Components supplies customers across Australia and New Zealand, supporting projects in metropolitan, regional and remote locations.

Contact Details

Phone: 1300 785 911
Email: sales@switchesplus.com.au
Web: switchesplus.com.au
Address: 119-121 Rodeo Drive,
Dandenong South, Victoria, 3175

Switches Plus Components

SWITCHES PLUS COMPONENTS

Our Brands

We work with a global network of suppliers, providing access to established brands used across industrial applications.

Product Range

We offer a wide range of industrial electrical components and automation solutions, from consumables through to specialised technical products. This includes both standard stocked products and specialist components sourced for applications where standard options do not meet your requirements.

Products are selected with compliance to relevant standards and appropriate IP ratings in mind, ensuring suitability for industrial environments and application requirements. Our product range includes:

- Automation Components
- Beacons & Alarms
- Cable
- Cable Management & Accessories
- Circuit Protection
- Connectors
- Contactors & Relays
- Enclosures
- Switches
- Terminals & Distribution Devices
- Timers & Monitoring Relays
- Transformers & Power Supplies

Switches Plus Components was established in 1997 through the strategic merger of C&K Electronics and Jesec Switches Plus. This union brought together more than 40 years of combined industry expertise, establishing our position as a market leader in electronic components.

A pivotal moment came in November 2012 when Switches Plus evolved from a traditional electronics components supplier into a comprehensive industrial solutions provider, transforming the company's trajectory and market presence. In February 2025, Switches Plus Components entered an exciting new chapter when it was acquired by Dore Electrics, a move that significantly strengthens the company's footprint in the Industrial Electrical and Automation market.

The partnership with Dore Electrics enhances our ability to deliver comprehensive electrical solutions while maintaining the high standards and customer-focused approach that has defined Switches Plus Components for over four decades.

Catalogues

Looking for something not in this catalogue? Don't worry, we have over 5000 stocked lines, and access to thousands more!











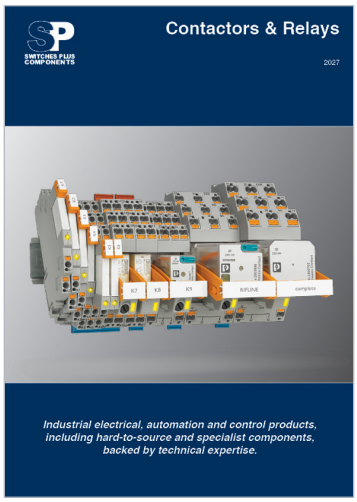



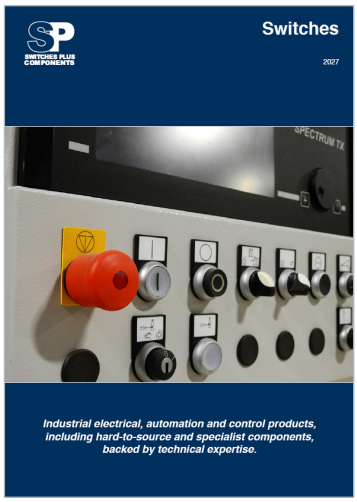

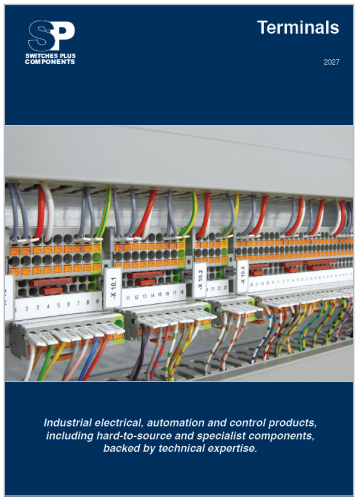





Contents

Pilot Lights 10
8mm & 12mm LED Pilot lights 10
16mm LED Pilot lights 10
22mm Flashing Light & Buzzer 11
22mm LED Pilot lights 11
22mm LED Pilot lights- Dual Colour 11
22mm LED Pilot lights with Lamp Test Circuit 11
22mm Push to Test LED Pilot lights 11
Anti-vandal Pilot lights 10
IP65 (Red/Green) 11

Beacons & Sounders 6
65mm Ø Panel Mount LED Beacon 6
65mm Ø Xenon Strobe Beacon 6
93mm Ø LED Flashing Beacon and Siren 7
94-132mm LED Beacon and Alarm 7
110mm Ø Panel Mount Multicolour Beacon & Sounder 6
Steady or Flashing (chosen via terminal), IP66 with optional gasket, 7

Sounders 8
30/45/65mm Ø Panel Mount Alarm 8
Industrial Bells 8
M28 Audiolarm II 8

Stack Lights 9
70mm Stack Light LED Towers 9



65mm Ø Panel Mount LED Beacon

IP65, M22 mount

- Ø 65 mm panel-mount LED multi-colour Steady beacons
- Ø 65 mm Red Steady/Flashing
- Colour/Function can be switched externally
- Modern LED technology and electronics
- Panel size Ø 22.5 mm/M22





Voltage	Red - Green - Yellow	Red - Steady/Flashing
24V AC/DC	802 550 405	802 502 405

65mm Ø Xenon Strobe Beacon

IP65, Xenon tube included

- Ø 65 mm compact xenon strobe beacon
- Prewired, 400 mm connecting cord
- Degree of protection IP 65
- 2 J strobe energy







Voltage	Red	Amber	Blue
24V DC	D118 522 005	D118 521 005	
24V AC	D118 522 305		
240V AC	D118 522 313		D118 525 313

110mm Ø Panel Mount Multicolour Beacon & Sounder

IP66, IK08, Multi-function, 7 colours

- RGB beacon - all 7 colours externally controllable (red, yellow, green, blue, clear, magenta, turquoise)
- RGB beacon with multifunctional upgrade: multifunction table controllable via DIP-Switch (steady light, flashing light, strobe light, pulsating light
- 110mm Ø x 68mm (H) Beacon, Standard Base = 19mm (H), Audible Base = 62mm (H)
- Audible base has 32 tones, 3 Tones can be switched externally







Voltage	Red, Yellow, Green, Blue, Clear, Magenta, Turquoise	Audible Base 32 tones, 95dB	Base (Horiz/Vert mounting)
24-48V AC/DC	850 570 408	850 535 408	850 500 900
110-240V AC	850 570 313	850 535 313	

Switches Plus Components Pty Ltd
119-121 Rodeo Drive, Dandenong South, VIC, 3175
Phone: 1300 785 911
Email: sales@switchesplus.com.au

93mm Ø LED Flashing Beacon and Siren

IP65, Cost effective LED flashing beacon with integrated electronic multitone (2 - 32 tones) siren

- Cost-effective multi-tone alarm sounder with LED flashing beacon
- 32 tones can be selected via DIP switch
- Sound pressure can be preselected in 3 steps via DIP switch (88-109dB)
- For universal applications at 24 V DC
- Second tone can be switched externally
- Degree of protection IP 65 can be achieved if installed correctly





Size	Voltage	Amber	Red	Red
93mm Ø	24V DC	C111 221 005	C111 222 005	C111 622 005

94-132mm LED Beacon and Alarm

Steady or Flashing (chosen via terminal), IP66 with optional gasket, 32 tone alarm (8 tones on 94mm 230V model)

The Q series is a series of warning lamps with modern LED technology strobe lights that provide good signalling power and compact design. The unique lens provides a clear, sharp light with good spread. LED-technology gives long lifespan, low current consumption and better durability when subject to vibration. And with IP66 protection, these warning lamps are approved for industry, fire warning, maritime use, etc.

- 94 mm cubic-design LED - 30 cd luminous intensity, Alarm - 108dB
- 132 mm cubic-design LED - 60 cd luminous intensity, Alarm- 113dB
- Good frontal and lateral signalling effect
- High degree of protection IP66 & impact resistance IK09
- UV-stabilised material
- Modern LED technology
- Steady and flashing light, can be switched externally
- For industrial and general applications
- Combinations of beacons and multi-tone alarm sounders possible



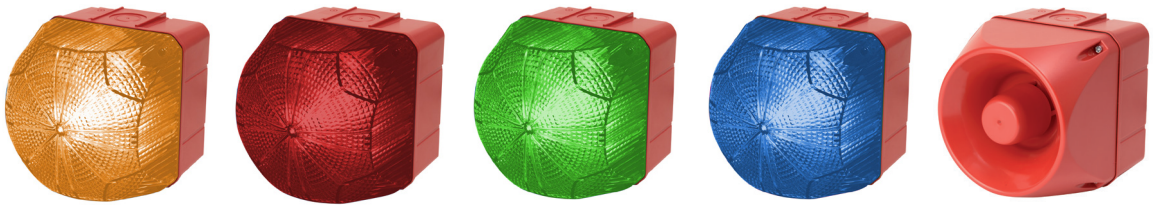

Size	Voltage	Amber	Red	Green	Blue	Alarm
94mm □	24V AC/DC	874 161 405	874 162 405	874 166 405	874 165 405	874 170 408
	48V AC/DC	874 161 408	874 162 408	874 166 408	874 165 408	
	110/240V AC/DC					874 060 313
132mm □	24-48V AC/DC	874 261 408	874 262 408	874 266 408	874 265 408	874 270 408
	110/240V AC/DC	874 261 413	874 262 413	874 266 413		874 270 313

Switches Plus Components Pty Ltd
119-121 Rodeo Drive, Dandenong South, VIC, 3175
Phone: 1300 785 911
Email: sales@switchesplus.com.au

Sounders

30/45/65mm Ø Panel Mount Alarm

IP65, M22 mount, 85-100dB, 12-24V AC/DC

- Ø 30 mm panel-mount buzzer Max. 85 dB(A)
- Ø 45 mm panel-mount buzzer Max. 100 dB(A) adjustable*
- Ø 65 mm panel-mount buzzer Max. 105 dB(A) adjustable*
- High degree of protection IP 65 (Ø28 = IP54)
- Panel size Ø 22.5 mm/M22
- Ø28 mm requires 28mm mounting hole
- User-friendly connection technology
- For industrial and general applications






Tone	28mm Ø 80-90dB#	30mm Ø 85dB	45mm Ø 85-100dB*	65mm Ø 85-105dB*
Continuous/Pulsing		812 510 405	813 500 405	
Pulsing (24V AC/DC)	B100 520 405			
Continuous/Pulsing/Warble				814 500 405

#Approx 10dB volume reduction available with manual shutter, pulsing tone only. *Adjustable via potentiometer

M28 Audiolarm II

Approx 1" Ø, mounting hole 29mm - IP68 with optional gasket

Floyd Bell's AudioLarm® II Series, first developed, sold and launched in 1982, and the subject of continuous improvement and innovation, is a solid-state, environmentally secure piezo electric alarm, that has become the most widely used industrial alarm in the world. This series has grown to become the industry's largest selection of piezo electric alarms. Our optional shutter-type manual volume control, provides variable attenuation of up to 20 dB.



Part Number	Tone	Volume	Sound level	Voltage	Termination
MC-07-530-SR	Continuous	Medium loud	95dB	5-30V DC	Screw & Quick Connect
MW-V07-530-SR	Warble	Loud with volume control	95dB	5-30V DC	Screw & Quick Connect
MW-09-201-S	Extra fast warble	Medium loud	95dB	30-120V AC	Screw & Quick Connect
MW-09-301-SR	Extra fast warble	Loud	95dB	130-240V AC	Screw & Quick Connect
MW-09-550-SR	Extra fast warble	Medium loud	95dB	15-36V AC/DC	Screw & Quick Connect
G-79	Gasket to suit				

Industrial Bells

Surface Mount

Our alarm bells are designed and manufactured according to UL standards and feature: High sound level output. Low power consumption. Quick and easy installation. Zero standby current. Low current consumption for efficient operation over long wire runs. Loud, distinctive and clear ringing sound.

Diameter	Sound level	Voltage	Red	Grey
100mm / 4"	86dB	24V AC	CB4BAC24R	CB4BAC24G
		24V DC	CB4BDC24R	CB4BDC24G
150mm / 6"	96dB	12V DC	CB6BDC12R	CB6BDC12G
		24V AC	CB6BAC24R	CB6BAC24G
		24V DC	CB6BDC24R	CB6BDC24G
200mm / 8"	102dB	24V AC	CB8BAC24R	CB8BAC24G
		24V DC	CB8BDC24R	CB8BDC24G
250mm / 10"	104dB	24V AC	CB10BAC24R	CB10BAC24G
		24V DC	CB10BDC24R	CB10BDC24G



Switches Plus Components Pty Ltd
119-121 Rodeo Drive, Dandenong South, VIC, 3175
Phone: 1300 785 911
Email: sales@switchesplus.com.au

Stack Lights

70mm Stack Light LED Towers

IP66, 70mm Ø modular design



The new signal tower from Auer Signal is a very special one: the Modul Perfect 70, better known as PC7, is one of the most versatile signal towers indeed, available. In terms of creative design, performance, application possibilities and future suitability, it just can't get any better!

Outstanding brightness

With up to 6 times the brightness, the PC7 leaves competitors' signal towers in the shade and guarantees the best possible signalling effect – even when faced with the challenge of very bright conditions.

Tallest tower available, using up to 7 modules

Different individual modules require different numbers of contacts. The new inner contacting offers 8 contacts, which enable a total of 7 positions. This makes challenging, visual-audible tower variants feasible. The unique and patented inner contacting also enhances the visual appearance of the PC7, as the externally visible contacting wires that were previously used are no longer required.

Multi function LED modules

A true all-rounder – the new PC7 multi function module can provide **steady** light, **flashing** light, **strobe** light and **double strobe** light functions. The different functions, can be user-defined in each module via a DIP switch. The top module light provides not only 360° lighting, but also 180° hemispherical lighting at the top or bottom, depending on how the tower is mounted. This increases the signalling effect and ensures that the tower is clearly visible, at different heights. We have listed the most common LED modules here, other colours are available upon request.

Multi-tone Piezo Module

The tone module of the PC7 can be placed inline or on top of the tower.
DIP switches can be used to select one of eight tones with an adjustable volume of up to 102 dB.



Top Red	Top Amber	Inline Red	Inline Green	Inline Amber	Inline Blue	Inline Clear	Piezo Module
Steady - Flash		Steady - Flashing - Strobe - Double Strobe					Multi-tone
910 112 405	910 111 405	910 022 405	910 026 405	910 021 405	910 025 405	910 024 405	910 520 405
Strobe - Double Strobe		Rotating					
910 122 405	910 121 405	910 032 405	910 036 405	910 031 405	910 035 405	910 034 405	

Base selection (2 parts required)

Choose from horizontal, vertical or pole mount base, then choose voltage selector module to suit voltage being used.
A black cap is supplied with the voltage selector module to enable inline modules to be used on the top of tower.



Mounting base (part 1)			
Horizontal Base	Vertical Base	100mm Pole	250mm Pole
910 710 900	910 730 900	910 742 900	910 743 900

Voltage selector module (part 2)		
24V AC/DC (7)	120-240V AC (3)	120-240V AC (7)
910 771 405	910 772 313	910 773 313

Switches Plus Components Pty Ltd
119-121 Rodeo Drive, Dandenong South, VIC, 3175
Phone: 1300 785 911
Email: sales@switchesplus.com.au

Pilot Lights

Anti-vandal Pilot lights

IP67, M12 thread, 5mm LED







LED Voltage	Red	Green	Blue	White	Yellow
24V DC	IL-NI-05-R-4-N	IL-NI-05-G-4-N	IL-NI-05-B-4-N	IL-NI-05-W-4-N	IL-NI-05-Y-4-N

8mm & 12mm LED Pilot lights

IP65

PL8 & PL12 high brightness pilot lights, have longevity of service, low energy consumption in a compact chrome plated metal housing complete with 140mm leads. Suitable for replacement of incandescent and neon indicator lamps.

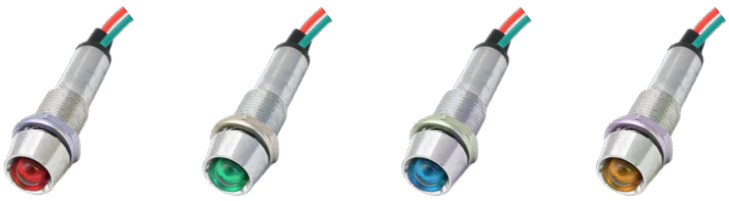

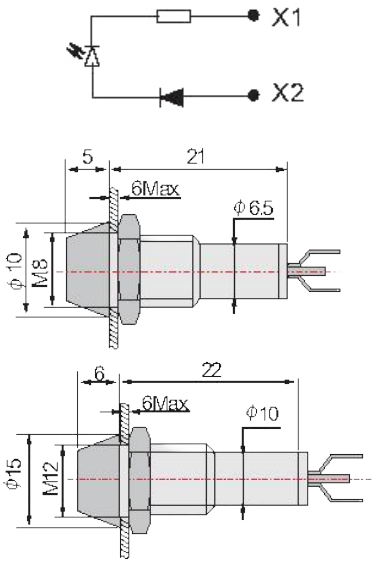

Voltage	Red	Green	Blue	Amber	Size
12V AC/DC	PL8R12	PL8G12	PL8B12	PL8A12	8mm ø
24V AC/DC	PL8R24	PL8G24	PL8B24	PL8A24	
220V AC/DC	PL8R220	PL8G220	PL8B220	PL8A220	
12V AC/DC	PL12R12	PL12G12	PL12B12	PL12A12	12mm ø
24V AC/DC	PL12R24	PL12G24	PL12B24	PL12A24	
220V AC/DC	PL12R220	PL12G220	PL12B220	PL12A220	

16mm LED Pilot lights

IP65







Voltage	Red	Green	Blue	White	Yellow
12V AC/DC	AD16–16 R 12V	AD16–16 G 12V	AD16–16 B 12V	AD16–16 W 12V	AD16–16 A 12V
24V AC/DC	AD16–16 R 24V	AD16–16 G 24V	AD16–16 B 24V	AD16–16 W 24V	AD16–16 A 24V
220V AC	AD16–16 R 240V	AD16–16 G 240V	AD16–16 B 240V	AD16–16 W 240V	AD16–16 A 240V

Switches Plus Components Pty Ltd
119-121 Rodeo Drive, Dandenong South, VIC, 3175
Phone: 1300 785 911
Email: sales@switchesplus.com.au

Pilot Lights

22mm LED Pilot lights
IP65



Voltage	Red	Green	Blue	White	Yellow
12V AC/DC	L22 12V R	L22 12V G	L22 12V B	L22 12V W	L22 12V Y
24V AC/DC	L22 24V R	L22 24V G	L22 24V B	L22 24V W	L22 24V Y
220V AC	L22 220V R	L22 220V G	L22 220V B	L22 220V W	L22 220V Y

22mm Push to Test LED Pilot lights
IP65



Voltage	Red	Green	Blue	Yellow/Amber
24V AC/DC	AD56–22DTR 24V	AD56–22DTG 24V	AD56–22DTB 24V	AD56–22DTA 24V
20V AC	AD56–22DTR 240V	AD56–22DTG 240		

22mm LED Pilot lights with Lamp Test Circuit
IP65, Fitted with Internal Test Diode



Voltage	Red	Green
24V AC/DC	PL22RT24LED	PL22GT24LED
240V AC/DC	PL22RT240LED	PL22GT240LED

22mm LED Pilot lights- Dual Colour
IP65 (Red/Green)



Voltage	Red - Green
24V AC/DC	PL22RG24LED
240V AC	PL22RG240LED

22mm Flashing Light & Buzzer
IP65, 80dB @ 10cm



Voltage	Red Flash Only	Red Flash & Buzzer	Buzzer Only
12V AC/DC		FBZ22R12AC/DC	
24V AC/DC	AD16-22DH 24V	FBZ22R24AC/DC	BZ22AC/DC24
240V AC		FBZ22R240	BZ22AC240

Switches Plus Components Pty Ltd
119-121 Rodeo Drive, Dandenong South, VIC, 3175
Phone: 1300 785 911
Email: sales@switchesplus.com.au

SWITCHES PLUS COMPONENTS

Switches Plus Components Pty Ltd
119-121 Rodeo Drive,
Dandenong South, VIC, 3175
Phone: 1300 785 911
Email: sales@switchesplus.com.au

V 26.11.09