SWITCHES PLUS COMPONENTS

Switches

2027



Industrial electrical, automation and control products, including hard-to-source and specialist components, backed by technical expertise.

Switches Plus Components

SWITCHES PLUS COMPONENTS

Switches Plus Components is an Australian-owned specialist supplier of industrial electrical, control and automation products, supporting customers across Australia.

We've been working with switchboard builders, OEMs, machine builders, industrial electricians and engineers for more than 40 years, supporting projects where product selection, system integration and long-term performance all matter.

We act as the Australian distributor for over 40 suppliers, with over 10,000 items on our wesbite, and 5,000+ products stocked in our warehouse from leading global manufacturers, known for their quality, reliability and performance in industrial applications.

What We Do

We supply a broad range of industrial electrical, automation and control components suited to your application requirements, whether standard or specialist.

Our role extends beyond supplying part numbers. We focus on solving application challenges, ensuring product decisions align with system design, operating conditions and long-term performance requirements.

Access Specialist and Hard-to-Source Products

Not all projects align with standard, catalogue-based supply. Switches Plus supports applications where system constraints, integration requirements and operating conditions influence product selection. This includes sourcing specialist and hard-to-source components where only specific or niche products will meet the requirements of your application.

Work with a Technically Informed Team

Our team understands the industries our customers work in and how those environments shape product requirements. They work alongside you to provide practical technical input, so product decisions are based on what will perform in your application, not just what's available.

Industries and Applications

Switches Plus Components serves a wide range of customers and industries. Our customers include electrical contractors, switchboard builders, machine builders (OEMs), engineers and system integrators who work across many industries including:

- Defence
- Industrial automation
- Manufacturing plants
- Mining operations
- Utilities
- Infrastructure projects
- Renewable Energy
- Electrical Contractors

These are environments where product selection, technical input and operating conditions directly influence system performance and service life.

Our Mission

We make it easier for our customers to get the right industrial electrical, automation and control products for their application, so they can deliver reliable systems.

Our Vision

To contribute to reliable, well-performing industrial systems across the industries we support.

How We Work

We work from your application requirements
Product selection is guided by how your system is designed, built and expected to perform.

We focus on what will work in your application
Decisions are based on system requirements, operating conditions and long-term performance, not just availability.

We bring practical technical input
Our team understands the industries you work in and provides input that reflects how systems are built, installed and used.

We source beyond standard options when needed
We source components suited to your application, not limited to standard product ranges.

We work alongside you throughout the project
We respond quickly, communicate clearly and work with you to keep things moving.

National Coverage

Switches Plus Components supplies customers across Australia and New Zealand, supporting projects in metropolitan, regional and remote locations.

Contact Details

Phone: 1300 785 911
Email: sales@switchesplus.com.au
Web: switchesplus.com.au
Address: 119-121 Rodeo Drive,
Dandenong South, Victoria, 3175

Switches Plus Components

SWITCHES PLUS COMPONENTS

Our Brands

We work with a global network of suppliers, providing access to established brands used across industrial applications.

Product Range

We offer a wide range of industrial electrical components and automation solutions, from consumables through to specialised technical products. This includes both standard stocked products and specialist components sourced for applications where standard options do not meet your requirements.

Products are selected with compliance to relevant standards and appropriate IP ratings in mind, ensuring suitability for industrial environments and application requirements. Our product range includes:

- Automation Components
- Beacons & Alarms
- Cable
- Cable Management & Accessories
- Circuit Protection
- Connectors
- Contactors & Relays
- Enclosures
- Switches
- Terminals & Distribution Devices
- Timers & Monitoring Relays
- Transformers & Power Supplies

Switches Plus Components was established in 1997 through the strategic merger of C&K Electronics and Jesec Switches Plus. This union brought together more than 40 years of combined industry expertise, establishing our position as a market leader in electronic components.

A pivotal moment came in November 2012 when Switches Plus evolved from a traditional electronics components supplier into a comprehensive industrial solutions provider, transforming the company's trajectory and market presence. In February 2025, Switches Plus Components entered an exciting new chapter when it was acquired by Dore Electrics, a move that significantly strengthens the company's footprint in the Industrial Electrical and Automation market.

The partnership with Dore Electrics enhances our ability to deliver comprehensive electrical solutions while maintaining the high standards and customer-focused approach that has defined Switches Plus Components for over four decades.

Catalogues

Looking for something not in this catalogue? Don't worry, we have over 5000 stocked lines, and access to thousands more!











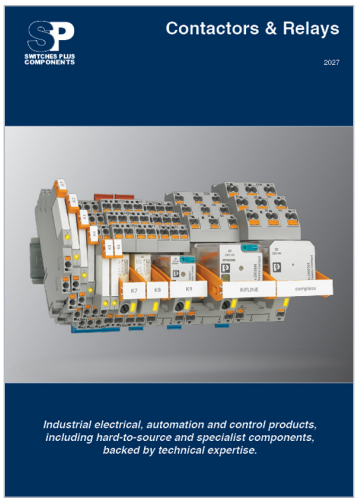



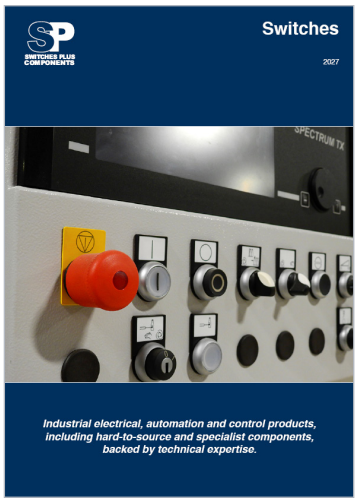

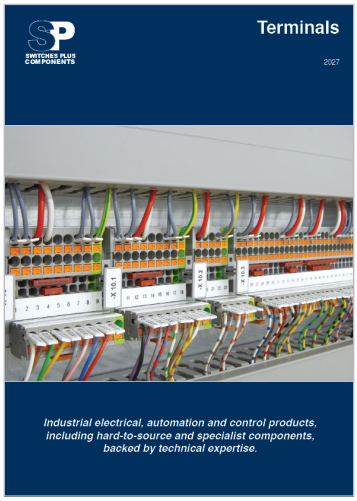





Contents

Cam Switches 11
Cam Switches 11

Foot Switches 14
Commerical Duty Foot Switch 14
Heavy Duty Foot Switch 15
Medium Duty Foot Switch 15

High Current Switches 12
Main Switches - 3 Pole Enclosed 13
Main Switches - 3 Pole Panel Mount 12
Main Switches - 4 Pole Door Clutch 12
Modular Changeover Switches 13
Modular Main Switches 13

Limit & Micro Switches 16
Interlock Switch 18
Limit Switches - MEA Series 20
Limit Switches - ME Series 21
Limit Switches - MJ1 Series 17
Limit Switches - MJ Series 22
Limit Switches - MN Series 19
Micro Switch 16
Micro Switch - Miniature 18

Pilot Devices 6
22mm Accessories 8
22mm Buzzers, Flashers & Dual Colour 9
22mm Double pushbutton 6
22mm Emergency Stop 6
22mm LED Pilot lights 9
22mm Mushroom 6
22mm Pushbuttons 6
22mm Selector Switches 7
Anti-vandal Pilot lights 10
Anti-Vandal pushbuttons 10
Joystick 7
Key Selector Switches 7
M22 Control enclosures 9
Modular Control Switches 10
Modular Indicators 10
Palm switch 9
Potentiometer 7

Switches 23
Crane & Hoist Pendants 23
Dome pushbuttons 25
Float Switches 23
Rocker Switches 24
Toggle Switches 24



Pilot Devices

The new M22 series of Industrial Pilot devices, combine modern European styling with an attractive slim design, long life, and worldwide approvals.

The rugged design of the IP65 pushbutton operators and contact blocks, provide reliable mechanical operation exceeding five million switching cycles. The illuminated versions, have a LED light source, that will operate between 12-30V AC/DC, with optional 230V LED modules also available, providing 100,000 hours of illumination.

Contact blocks are capable of switching 6A at 230V AC, and 3A at 24V DC, making them a very versatile switch. Keyed switch operators, Emergency stops, and illuminated selector switches complete the product offering.

Rated operational current		
230V	AC-15	6 A
400V		4 A
500V		2A
24V	DC-13	3 A
42V		1.7 A
60V		1.2 A
110V		0.8 A
220V		0.3 A

22mm Pushbuttons

IP65, Supplied with 1NO + 1NC



Function	LED	Green	Red	White	Yellow /Amber	Blue	Black
Latching	No	M22FP-ASF11G	M22FP-ASF11R	M22FP-ASF11W	M22FP-ASF11Y	M22FP-ASF11BL	
	12-30V AC/DC	M22FP-ASF11E30G	M22FP-ASF11E30R	M22FP-ASF11E30W	M22FP-ASF11E30Y	M22FP-ASF11E30BL	
Momentary		M22FP-MSF11E30G	M22FP-MSF11E30R	M22FP-MSF11E30W	M22FP-MSF11E30Y	M22FP-MSF11E30BL	
	No	M22FP-MSF11G	M22FP-MSF11R	M22FP-MSF11W	M22FP-MSF11Y	M22FP-MSF11BL	M22FP-MSF11BKO
230V AC LED Module		M22-SF-E230G	M22-SF-E230R	M22-SF-E230W	M22-SF-E230Y	M22-SF-E230BL	

22mm Emergency Stop

Complete assembly

Specifications:
IP65, 230V, 6A

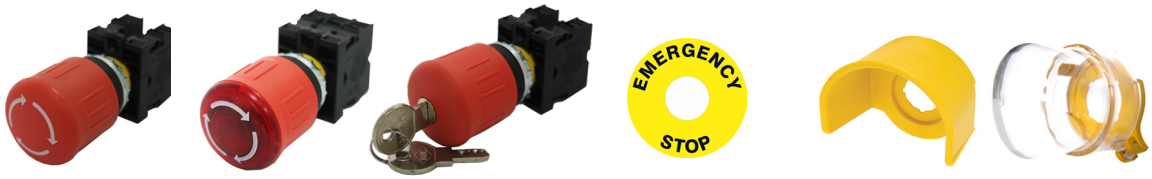

Contacts	Illuminated	Latching, Twist release	Latching, Twist release	Latching, key release	Legend plate	Guard	Sealable Shroud
2 NC	No	M22E-TSF02		M22E-KSF02	LABEL EMERG STOP	M22E-GR	MM216397
1 NO + 1 NC	12-30V AC/DC		M22EL-TSF11E30				

22mm Mushroom

IP65



Contacts	Function	Red 36mm Ø	Green 36mm Ø
1 NO + 1 NC	Momentary	M22MP-MSF11RO	M22MP-MSF11GO

22mm Double pushbutton

IP65



Contacts	Function	Double Switch block	Actuator Only
1 NO + 1 NC	Momentary	M22DP-SF11E30GR	
None	Momentary		MM216710

Switches Plus Components Pty Ltd
119-121 Rodeo Drive, Dandenong South, VIC, 3175
Phone: 1300 785 911
Email: sales@switchesplus.com.au

Pilot Devices

22mm Selector Switches

IP65, Supplied with Contact Blocks





Position	Contacts	Maintained
2 (0 1)	2 NO	M22S-T20SF20WO
3 Centre Off (1 0 2)	2 NO	M22S-T30SF20WO
2 60° V - actuator only (1 2)	NONE*	MM216874

*Contact block holder and contacts to be ordered separately

Position	Contacts	Momentary
2 Spring Return from Right (0 1)	2 NO	M22S-T22SF20WO
3 Spring Return from Left & Right (1 0 2)	2 NO	M22S-T32SF20WO









Position	Contacts	Maintained - Illuminated 12-30V AC/DC			
2 (0 1)	2 NO	M22S-T20SF20E30R	M22S-T20SF20E30G	M22S-T20SF20E30Y	M22S-T20SF20E30BL

Key Selector Switches

IP65, 22mm mount, no Key Traps
Includes 1 x Key













	Off - On	Off - (On)	On - Off - On	NC Contact block	NO Contact block	Contact Holder
Part Number	MM216887	MM216881	MM216900	M22-SF-NC	M22-SF-NO	M22-A3

Joystick

IP65, 22mm mount, Momentary









	2 Way	4 Way	NC Contact block	NO Contact block	Contact Holder
Part Number	MM289196	MM279417	M22-SF-NC	M22-SF-NO	MM279437

Potentiometer

IP66, 22mm mount, 10KOhm



	10kOhm Pot
Part Number	MM229491

Switches Plus Components Pty Ltd
119-121 Rodeo Drive, Dandenong South, VIC, 3175
Phone: 1300 785 911
Email: sales@switchesplus.com.au

22mm Accessories







Description	Front Mount NC Contact block	Front Mount NO Contact block	Base Mount NC Contact block	Base Mount NO Contact block	Emergency Stop Self Monitoring contact 1NC + 1NO
Part Number	M22-SF-NC	M22-SF-NO	MM216382	M22-SB-NO	M22-K01SMC10S









Description	3 Contact Holder	4 Contact Holder	MS1 Key	12-30V AC/DC LED block	M22K - Key trap kit	Mounting Tool	Plunger Bridge
Part Number	M22-A3	MM279437	MM216416	M22-SF-E30**	MM216406	MM216402	MM216405

** Replace with colour code, R = Red, G = Green, BL= Blue, W = White, Y = Yellow










Description	Face Plate ARROW	Face Plate STOP	30mm to 22mm Adaptor	Din Mount Adaptor	Water resistant cover single pushbutton	Water resistant cover double pushbutton	M22 Blanking Plug - Grey
Part Number	M22-ARROW	M22-STOP	MM216408	MM216400	M22-C1	M22-C2	MM216388













	0 I	I 0 II	STOP	START	ON	RUN
Part Number	MM216485	MM216486	MM216494	MM216495	MM216496	MM216497














	FAULT	OFF ON	MAN AUTO	MAN 0 AUTO	OFF	Label holder	Blank Label
Part Number	MM216498	MM216499	MM216500	MM216501	MM218300	MM216392	MM216480

Switches Plus Components Pty Ltd
119-121 Rodeo Drive, Dandenong South, VIC, 3175
Phone: 1300 785 911
Email: sales@switchesplus.com.au

Pilot Devices

22mm LED Pilot lights

IP65



Voltage	Red	Green	Blue	White	Yellow
12V AC/DC	L22 12V R	L22 12V G	L22 12V B	L22 12V W	L22 12V Y
24V AC/DC	L22 24V R	L22 24V G	L22 24V B	L22 24V W	L22 24V Y
220V AC	L22 220V R	L22 220V G	L22 220V B	L22 220V W	L22 220V Y

22mm Buzzers, Flashers & Dual Colour

IP65



Voltage	Red Flash Only	Red Flash & Buzzer	Buzzer Only	Dual Colour - Red/Green
12V AC/DC		FBZ22R12AC/DC		
24V AC/DC	AD16-22DH 24V	FBZ22R24AC/DC	BZ22AC/DC24	PL22RG24LED
240V AC		FBZ22R240	BZ22AC240	PL22RG240LED

M22 Control enclosures

IP65, M22



	E-Stop enclosure	1 x M22	2 x M22	3 x M22	4 x M22	6 x M22
Part Number	B1 YELLOW/BK	B1 GREY	B2 GREY	B3 GREY	B4 GREY	B6 GREY

Palm switch

IP67/69K, 3xM20, 1xM16



Description	Red/Yellow 1 NC + 1 NO	Red/Grey 1 NC + 1 NO	Black/Grey 1 NC + 1 NO	Base Mount Contact Blocks	
Function	Maintained	Momentary	Momentary	Normally Closed	Normally Open
Part Number	MM229748	MM229746	MM229749	MM216382	M22-SB-NO

Switches Plus Components Pty Ltd
119-121 Rodeo Drive, Dandenong South, VIC, 3175
Phone: 1300 785 911
Email: sales@switchesplus.com.au

Pilot Devices

Anti-Vandal pushbuttons

IP67, Single Pole Double Throw,
250V 5A Contacts






Function	LED Voltage	Diameter	Red	Green	Blue	White
Momentary	12V AC/DC	19mm	AV02L-B22-M3-FR-R-12V	AV02L-B22-M3-FR-G-12V	AV02L-B22-M3-FR-B-12V	AV02L-B22-M3-FR-W-12V
Momentary	24V AC/DC	22mm	AV02L-B12-M3-FR-R-24V	AV02L-B12-M3-FR-G-24V	AV02L-B12-M3-FR-B-24V	AV02L-B12-M3-FR-W-24V

Anti-vandal Pilot lights

IP67, M12 thread, 5mm LED







LED Voltage	Red	Green	Blue	White	Yellow
24V DC	IL-NI-05-R-4-N	IL-NI-05-G-4-N	IL-NI-05-B-4-N	IL-NI-05-W-4-N	IL-NI-05-Y-4-N

Modular Control Switches

17.5mm wide


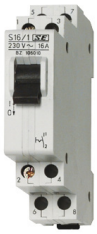




Function	I - O - II	Off - On	Off - On	Off - On	Off-(On)
Switch Type	Latching	Latching	Latching	Latching	Momentary
Contacts	1 CO	3 NO	2 NO	1 NO + 1 NC	1 NO + 1 NC
Rating 250V	16A	16A	16A	16A	16A
Part Number	BZ106380	BZ106030	BZ107020	BZ107030	BZ107430

Modular Indicators

17.5mm wide









Voltage	Green	Red	Yellow	Blue	White	Red/Green	
230V AC	AZ106800	AZ106801	AZ106802	AZ106803	AZ106804	AZ106808	
12-24V AC/DC							BZ127904

Switches Plus Components Pty Ltd
119-121 Rodeo Drive, Dandenong South, VIC, 3175
Phone: 1300 785 911
Email: sales@switchesplus.com.au

Cam Switches

Cam Switches
IP65, 22mm mounting

A diverse range of Cam switches rated to IP65, with 22mm central fastening.







Current	Poles	0 - 1	1 - 0 - 2	1 - 2
Schematic		A	B	C
20A	1	IN025120	IN026120	IN027120
20A	3	IN025320	IN026320	IN027320
32A	3	IN125325		







Current	Poles	1 - 2 - 3	1 - 2 - 3 - 4	START (momentary)
Schematic		D	E	F
20A	1	IN023901	IN023902	IN0ZC102







Current	Poles	0 - 1 - 2	0 - 1 - 2 - 3	Voltmeter
Schematic		G	H	I
20A	1	IN023904	IN023903	IN009V02

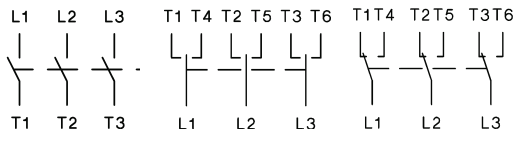

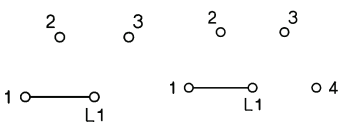

Schematic	A	B	C	D	E

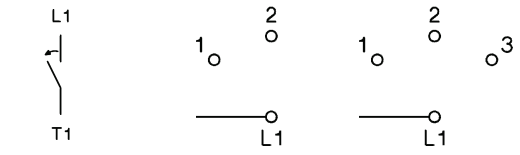

Schematic	F	G	H	I



Part Number	Face Plate Only
D482-MAN	MAN - OFF - AUTO
D482-FOR	FORWARD - OFF - REVERSE
D481-BLK	BLANK

Switches Plus Components Pty Ltd
119-121 Rodeo Drive, Dandenong South, VIC, 3175
Phone: 1300 785 911
Email: sales@switchesplus.com.au

High Current Switches

Main Switches - 3 Pole Panel Mount

IP65, Can hold up to 3 padlocks

3 Pole main switch can be converted to 4 pole, IP65 (front), IP10 (output terminals), IP20 (supply terminals with terminal cover) Auxilary contacts; Maximum 2x INSHK001 permitted (or 1x Aux + 1x Neutral). 4 hole Panel mounting.







Current Rating	32A	63A	80A	100A	125A
Part Number	INSE2332	INSE2363	INSE2380	INSE231A	INSE231B
Aux 1NO + 1NC	INSHK002				
Neutral Pole	INSNK020	INSNK021	INSNK022	INSNK023	

Main Switches - 4 Pole Door Clutch

IP54, IP65 with optional gasket

4 Pole Main Switch, IP65 (front), IP10 (output terminals), IP20 (supply terminals with terminal cover), Neutral conductor early-make, late-break design (closes before and opens after the phase conductors to prevent voltage displacement). 4 hole Panel mounting. Installation depth (from DIN rail to front panel) for standard shaft length 25-63A = 307 mm, 80A-100A = 391mm.

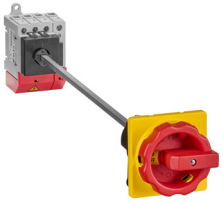
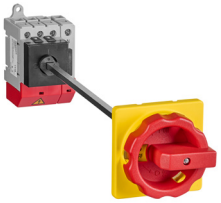
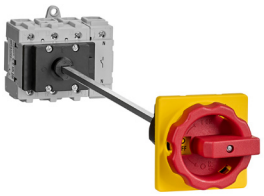
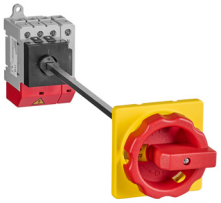

Current Rating	25A	63A	80A	100A
Part Number	INSA2425	INSA2463	INSA2480	INSA241A
Aux 1NO + 1NC	INSHK001			
Gasket (IP65)	D436 Z1/D1			

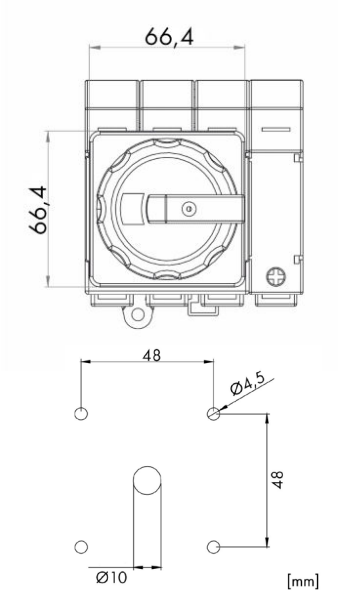

Conductor Sizing		
Current Rating	Stranded Class 2	Flexible Conductor with ferrule
20-63A	2.5-16mm²	
80A	2.5-35mm²	2.5-16mm²
100-125A	4.0-50mm²	4.0-35mm²

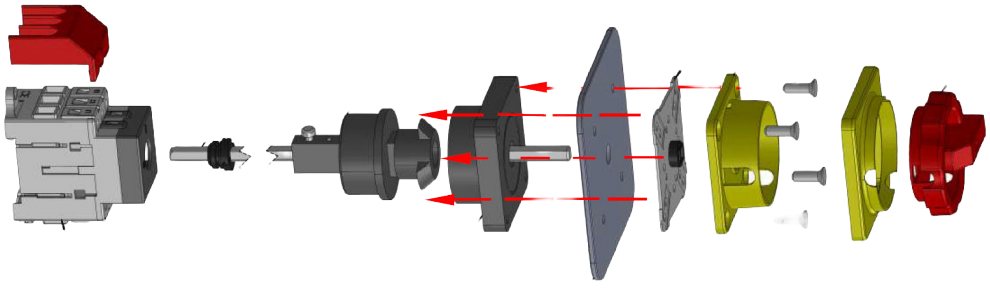

Switches Plus Components Pty Ltd
119-121 Rodeo Drive, Dandenong South, VIC, 3175
Phone: 1300 785 911
Email: sales@switchesplus.com.au

High Current Switches

Main Switches - 3 Pole Enclosed

IP65, Can hold up to 3 padlocks

3 Pole main switch can be converted to 4 pole, IP65 (front), IP10 (output terminals), IP20 (supply terminals with terminal cover) Auxilary contacts; Maximum 2x INSHK001 permitted (or 1x Aux + 1x Neutral)







Current Rating	20A	32A	63A	80A	100A
Part Number	INSP2320	INSP2332	INSP2363	INSP2380	INSP231A
Aux 1NO + 1NC	INSHK001				
Neutral Pole	INSNK010	INSNK010	INSNK011	INSNK012	INSNK013
Dimensions	100x140x115mm			200x146x138mm	304x214x181mm

Modular Main Switches

IP40

3 Pole main switch can be converted to 4 pole, IP Rating IP40 (front), IP10 (terminals). Auxilary contacts; Maximum 2x INSHK001 permitted. 1x INSHK001-- can be snapped on to the left side of the main contact and 1x INSHK001-- to the right side of the main contact. ATTENTION! If this 3-pole switch is converted to a 4-pole switch using neutral conductor contact then no additional auxiliary contact can be snapped onto the N contact. On the other side, auxiliary contact INSHK001 can be used as normal.





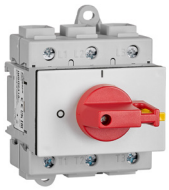
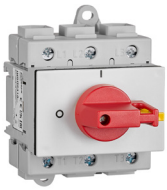

Current Rating	25A	40A	63A	80A	100A	125A
Part Number	INSR2325	INSR2340	INSR2363	INSR2380	INSR231A	INSR231B
Aux 1NO + 1NC	INSHK001					
Neutral Pole	INSNK010	INSNK011		INSNK012	INSNK013	

Modular Changeover Switches

IP40

4 Pole Modular Changeover Switches, IP Rating IP40 (front), IP00 (terminals), Neutral conductor early-make, late-break design (closes before and opens after the phase conductors to prevent voltage displacement). 100A+ models include factory-installed auxiliary contacts. 1NO + 1NC for left and right switch positions.






Current Rating	40A	63A	80A	100A	125A
Part Number	INSR3440	INSR3463	INSR3480	INSR341AHK	INSR341BHK
Aux 1NO + 1NC	INSHK001			1NO + 1 NC fitted each side of switch	

Switches Plus Components Pty Ltd
119-121 Rodeo Drive, Dandenong South, VIC, 3175
Phone: 1300 785 911
Email: sales@switchesplus.com.au

Foot Switches

Commerical Duty Foot Switch

Construction:

- Steel housing is painted black
- Two single models mounted on a twin base plate
- A divider bar between pedals, which helps prevent accidental operation of both switches, at one time in Twin models

Features & Benefits:

- Non-skid base pad and foot treadle pad
- 2 Holes provided for rigid mounting to floor or equipment
- The low profile and light pressure required to operate reduces operator fatigue



Part Number	Type	Dimensions	Switch Function	Switch circuit	Electrical Rating	IP rating
T-91-S	Single	89 x 66 x 21mm	Momentary	SPDT (NO / NC)	250V AC 15A	IP20

Construction:

- Mounted in a chrome plated heavy zinc die cast housing
- A full nonskid base pad
- A special vinyl cover gives added environmental protection against limited amounts of water and dirt (VK)
- The dip molded cover, is bonded to the vinyl base pad of the foot switch

Features & Benefits:

- Features a round black actuating cap
- Moderate pressure from any direction operates the switch
- Supplied with 3 core 1.8m prewired lead (bare ends/no plug)
- Wired normally open and grounded
- Ease of operation with foot or hand



Part Number	Type	Dimensions	Switch Function	Switch circuit	Electrical Rating	IP rating
GEM-V36	Single	96 x 33mm	Momentary	SPST (NO)	250V AC 10A	IP20

Construction:

- Rustproof and corrosion proof polymeric material
- Raised ribs on treadle for positive traction during operation
- Integrated adjustable strain relief clamp accommodates cord size from .250” Dia. to .400” Dia

Features & Benefits:

- Flame retardant to 94-VI
- Maximum versatility, total performance
- Non-skid base pad
- 2 holes provided for rigid mounting to Floor or equipment



Part Number	Type	Dimensions	Switch Function	Switch circuit	Electrical Rating	IP rating
971-SWNO210	Single (Plastic-3mtr lead)	101 x 87 x 29mm	Momentary	SPDT (NO / NC)	25V AC 3A	IP20

Medium Duty Foot Switch

Construction:

- Constructed of Cast Iron for long life
- Non-skid base pad
- Adjustable Strain relief connector
- Durable black finish

Features & Benefits:

- Proven Reliability
- 2 holes provided for rigid mounting to floor or equipment



Part Number	Type	Dimensions	Switch Function	Switch circuit	Electrical Rating	IP rating
642-S	Single	177 x 139 x 45mm	Momentary	SPDT (NO / NC)	250V AC 20A	IP20

Switches Plus Components Pty Ltd
119-121 Rodeo Drive, Dandenong South, VIC, 3175
Phone: 1300 785 911
Email: sales@switchesplus.com.au

Foot Switches

Medium Duty Foot Switch

Construction:

- Constructed of Cast Iron for long life
- Non-skid base pad
- Adjustable Strain relief connector
- Durable black finish
- Divider Bar on Twin Model

Features & Benefits:

- Proven Reliability
- 2 holes provided for rigid mounting to floor or equipment



Part Number	Type	Dimensions	Switch Function	Switch circuit	Electrical Rating	IP rating
632-S	Single	115 x 87 x 45mm	Momentary	SPDT (NO / NC)	250V AC 20A	IP20
635-SW	Single	115 x 87 x 45mm	Momentary	DPDT (NO / NC)	250V AC 10A	IP68
Twin 632-S	Twin	212 x 115 x 45mm	Momentary	SPDT (NO / NC)	250V AC 20A	IP20

Heavy Duty Foot Switch

Construction:

- Treadle and housing constructed from cast iron, for strength and durability
- Protected by a strong cast aluminum Shield
- Painted Alert Orange
- Single 3/4”-14 N.P.T. threaded conduit entry is standard
- All models have a neoprene cover gasket, plus O-rings, on the activating shaft and a separate ground screw

Features & Benefits:

- Rugged cast metal enclosure has sufficient weight to keep the switch from sliding when being operated
- In all Maintained Contact models the release is accomplished by simply pressing the latch with a light forward movement of the toe. The release is placed under the Full Shield, so falling objects cannot easily release it
- 3 holes provided for rigid mounting to the floor or equipment



Part Number	Type	Dimensions	Switch Function	Switch circuit	Electrical Rating	IP rating
531-SWH	Single	228 x 149 x 111mm	Momentary	SPDT (NO / NC)	250V AC 20A	IP56

Construction:

- Treadle and housing constructed from cast aluminum, for environmental durability
- Painted Alert Orange
- Single PG 16 threaded conduit entry is standard
- Protected by a strong cast aluminum Shield
- Oversize “O” Shield models accept oversized safety shoes

Features & Benefits:

- Snap action - SPDT with forced disconnect (positive break) on NC contacts
- Direct PLC interface compatible (two-circuit bifurcated contact single-pole versions)
- Galvanically isolated bifurcated contacts - NO and NC circuits can be wired to different loads and polarities
- 3 holes provided for rigid mounting to the floor or equipment



Part Number	Type	Dimensions	Switch Function	Switch circuit	Electrical Rating	IP rating
936-SWH	Single	230 x 149 x 119mm	Momentary	SPDT (NO / NC)	300V AC 10A	IP68
936-SWH-O	Single	230 x 149 x 138mm	Momentary	SPDT (NO / NC)	300V AC 10A	IP68
936-SWH-OX	Single	230 x 150 x 153mm	Momentary	SPDT (NO / NC)	300V AC 10A	IP68

Switches Plus Components Pty Ltd
119-121 Rodeo Drive, Dandenong South, VIC, 3175
Phone: 1300 785 911
Email: sales@switchesplus.com.au

Limit & Micro Switches

Micro Switch

250V AC 15A, SPDT, PBT & Phenolic body, Snap-acting Switch

- Side mount switches
- Momentary contacts
- Wide choice of heads and actuators
- Regular or Sealed actuators
- Temperature range -25° C to +80° C
- 15A at 250V AC
- 0.5A at 125V DC
- 240 operations/min
- Screw Terminations

Operating Speed	0.01mm to 1m/sec
Operating Frequency	Mechanical: 240 operations/min Electrical: 20 operations/min
Vibration	Malfunction durability: 10 to 55Hz; 1.5mm double amplitude
Shock	Mechanical durability: Approx 1km/sec^2 (approx 100 G's) Malfunction durability: Approx 300m/sec^2 (approx 30 G's)
Operating Temperature	-25°C to +80°C (IP40) -15°C to +80°C (IP65)
Service Life	Mechanical: 20,000,000 operations (min) Electrical: 500,000 operations min (1.7A 110V AC)
Humidity	85% RH max (IP40) 95% RH max (IP65)
Electrical Contacts	1 CO 250V AC 15A / 125V DC 500mA (resistive)



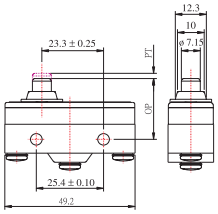

Part Number	Description	IP
MJ2-1306	Plunger Actuator	IP40



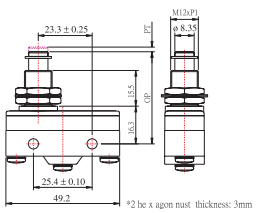

Part Number	Description	IP
MJ2-1307	Plunger Actuator	IP40



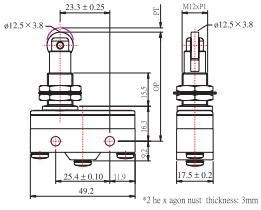

Part Number	Description	IP
MJ2-1308	Roller Plunger Actuator	IP40



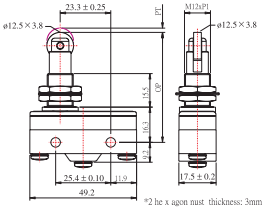

Part Number	Description	IP
MJ2-1308-R	Right Angled Roller Plunger Actuator	IP40



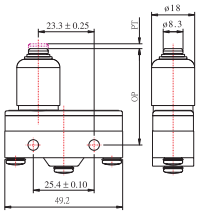

Part Number	Description	IP
MJ2-1317	Plunger Actuator	IP65



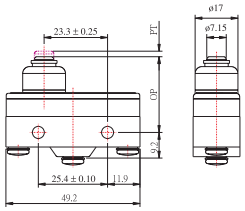

Part Number	Description	IP
MJ2-1515	Sealed Plunger Actuator	IP65



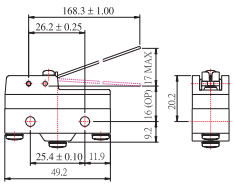

Part Number	Description	IP
MJ2-1578	168mm Wire Lever Actuator	IP40



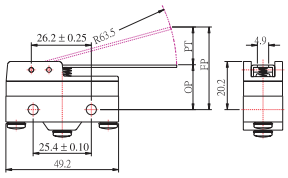

Part Number	Description	IP
MJ2-1701	Long Lever Actuator	IP40

Switches Plus Components Pty Ltd
119-121 Rodeo Drive, Dandenong South, VIC, 3175
Phone: 1300 785 911
Email: sales@switchesplus.com.au

Limit & Micro Switches

Micro Switch

moujen

250V AC 15A, SPDT, PBT & Phenolic body, Snap-acting Switch



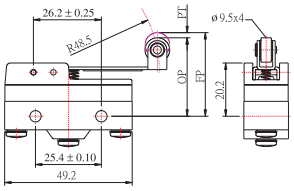



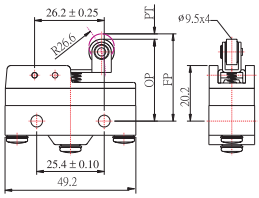

Part Number	Description	IP
MJ2-1703	Roller Lever Actuator	IP40
MJ2-1713	Roller Lever Actuator	IP65

Part Number	Description	IP
MJ2-1704	Roller Lever Actuator	IP40



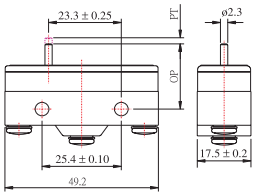

Part Number	Description	IP
MJ2-1300	Pin Plunger Actuator	IP40



Part Number	Description
MJ2-CB2	Micro-Switch Terminal Cover

Model	OF (max)	RF (min)	PT (max)	OT (min)	DT (max)	OP	FP (max)
MJ2-1300	250-450g	114g	0.5mm	0.13mm	0.05mm	15.9 ± 0.4mm	-
MJ2-1306	250-450g	114g	0.5mm	1.6mm	0.05mm	21.5 ± 0.5mm	-
MJ2-1307	250-450g	114g	0.5mm	5.5mm	0.05mm	38.1mm ± 0.8mm	-
MJ2-1308	250-450g	114g	0.5mm	3.58mm	0.05mm	49.7 ± 1.2mm	-
MJ2-1308-R	250-450g	114g	0.5mm	3.58mm	0.05mm	49.7 ± 1.2mm	-
MJ2-1317	540g	114g	2.4mm	3.5mm	0.06mm	38.1 ± 1.2mm	-
MJ2-1515	540g	114g	2.3mm	1.6mm	0.06mm	28.2 ± 0.5mm	-
MJ2-1578	10g	5g	10mm	6mm	3mm	20 ± 1mm	-
MJ2-1701	70g	14g	10mm	5.6mm	1.27mm	19 ± 0.8mm	28.2mm
MJ2-1703	100g	21g	7.1mm	4.0mm	1.6mm	30.2 ± 0.8mm	36.5mm
MJ2-1704	160g	42g	3.5mm	2.4mm	0.5mm	30.2 ± 0.8mm	34.5mm
MJ2-1713	130g	21g	7.1mm	4.0mm	1.6mm	30.2 ± 0.8mm	36.5mm

OF = Operating Force, RF = Release Force, PT = Pre-Travel, OT = Over-Travel, DT = Differential Travel, OP = Operating Position, FP = Free Position

Limit Switches - MJ1 Series

moujen

250V AC 15A, SPDT, IP65, Aluminium Alloy & PBT body, Snap-acting Switch



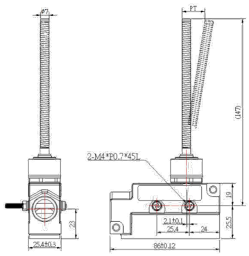



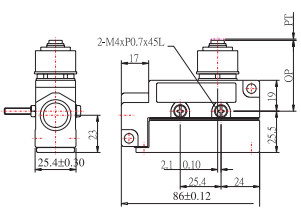

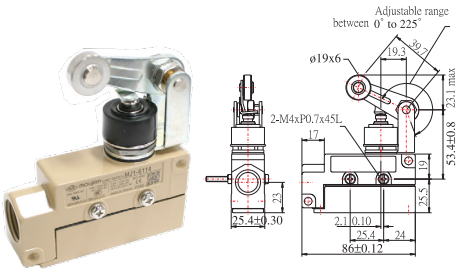

Part Number	Description
MJ1-6106	Large Spring Actuator

Part Number	Description
MJ1-6111	Plunger Actuator

Part Number	Description
MJ1-6114	Roller Actuator

Switches Plus Components Pty Ltd
119-121 Rodeo Drive, Dandenong South, VIC, 3175
Phone: 1300 785 911
Email: sales@switchesplus.com.au

Limit & Micro Switches

Micro Switch - Miniature

250V AC, SPDT, IP40



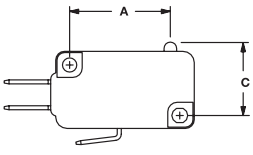

FIG. 1
Pin Plunger

Part Number	Actuator	'A' (mm)	250V AC	30V DC	Operating Force
MV-3000A20	Pin Plunger	20.3	20A	500mA	250g
MV-3000B			5A		100g
MV-3000P			15A		250g



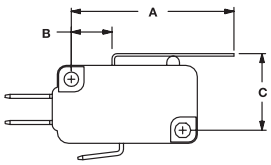

FIG. 3
Lever

Part Number	Actuator	'A' (mm)	250V AC	30V DC	Operating Force
MV-3003AL	Long Flat Lever	55	5A	500mA	140g
MV-3003BL					60g



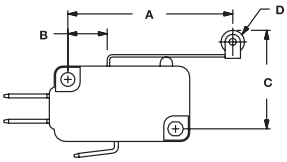

FIG. 2
Lever Roller

Part Number	Actuator	'A' (mm)	250V AC	30V DC	Operating Force
MV-3004A-NO	Short Roller Lever	20.6	5A	500mA	250g



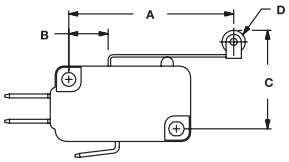

FIG. 2
Lever Roller

Part Number	Actuator	'A' (mm)	250V AC	30V DC	Operating Force
MV-3005A	Long Roller Lever	34.0	5A	500mA	140g

Interlock Switch

IP65, Key interlock, M20, 2 NC

Key interlock switch with right angle mount key. Head can be rotated for side actuation, and key can also be inserted in top of actuation head, allowing maximum mounting versatility.

Operating Specifications

Key plug in force	1500 gf
Key pull out force	3000 gf
Pre Travel	6 ± 3 mm
Total Travel	28 mm
Positive opening travel	10 mm

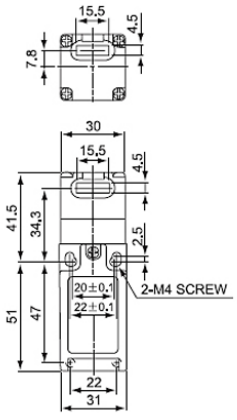



Part Number	Contacts
CZ-93BPM02	2 Normally Closed

Switches Plus Components Pty Ltd
119-121 Rodeo Drive, Dandenong South, VIC, 3175
Phone: 1300 785 911
Email: sales@switchesplus.com.au

Limit Switches - MN Series

250V AC 10A, SPDT, IP65, PBT, Phenolic & Steel body, Snap-acting Switch

- Side mount switches
- Momentary contacts
- Wide choice of heads and actuators
- Sealed actuators
- Completly sealed structure
- Plastic sealed construction
- Temperature range -15° C to +80° C
- 10A at 250V AC
- 0.5A at 125V DC
- 120 operations/min.

Operating Speed	0.01mm to 50cm/sec (at the pin plunger)
Operating Frequency	120 operations/min
Vibration	Malfunction durability: 10 to 55Hz; 1.5mm double amplitude
Shock	Mechanical durability: Approx 1km/sec² (approx 100 G's) Malfunction durability: Approx 300m/sec² (approx 30 G's)
Operating Temperature	-10°C to +80°C
Service Life	Mechanical: 10,000,000 operations (min) Electrical: 500,000 operations min (2A 110V AC)
Humidity	95% RH max (at +200 to +300C)
Electrical Contacts	1 CO 250V AC 10A / 125V DC 500mA (resistive)
Degree of protection	IP65

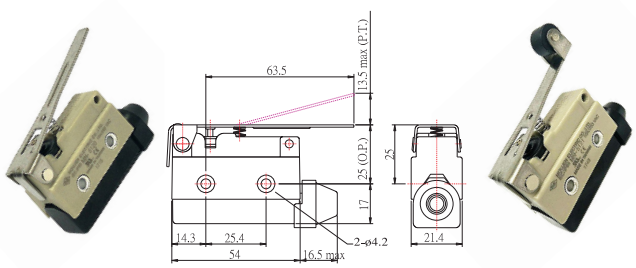

Part Number	Description
MN-5120	Lever Actuator

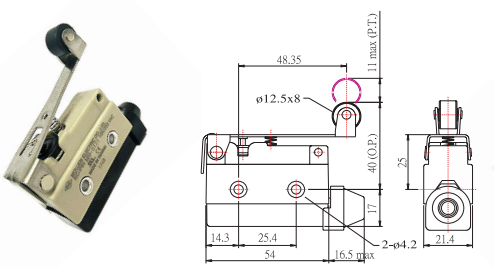

Part Number	Description
MN-5121	Roller Lever Actuator

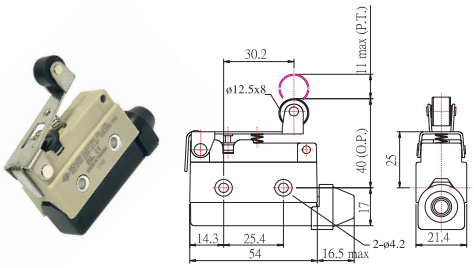

Part Number	Description
MN-5141	Roller Lever Actuator

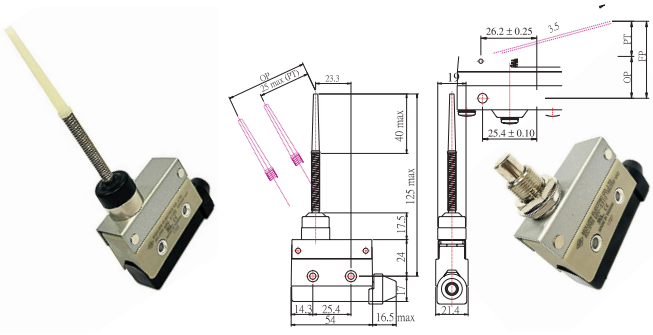

Part Number	Description
MN-5166	Flexible Arm Actuator

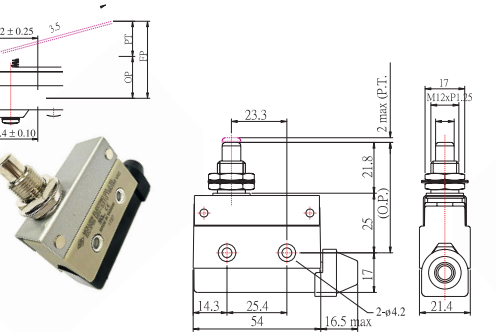

Part Number	Description
MN-5310	Plunger Actuator

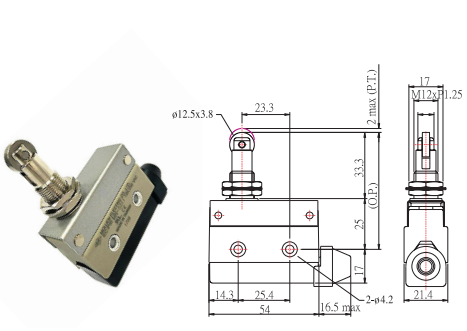

Part Number	Description
MN-5311	Roller Plunger Actuator

Model	OF (max)	RF (min)	PT (max)	OT (min)	DT (max)	OP
MN-5120	150g	40g	13.5mm	4.0mm	3.2mm	25 ± 2.0mm
MN-5121	180g	50g	11.0mm	3.0mm	2.4mm	40 ± 1.9mm
MN-5141	240g	80g	6.5mm	2.0mm	1.5mm	40 ± 1.6mm
MN-5166	120g	-	25mm	11mm	-	-
MN-5310	600g	100g	2.0mm	6.0mm	0.8mm	46.8 ± 1.5mm
MN-5311	600g	100g	2.0mm	6.0mm	0.8mm	58.3 ± 1.5mm

OF = Operating Force, RF = Release Force, PT = Pre-Travel, OT = Over-Travel, DT = Differential Travel, OP = Operation Position

Switches Plus Components Pty Ltd
119-121 Rodeo Drive, Dandenong South, VIC, 3175
Phone: 1300 785 911
Email: sales@switchesplus.com.au

Limit Switches - MEA Series

250V AC 6A, DPST, IP65, Light weight Plastic body, 1 NO + 1 NC, Snap-acting Switch

The MEA Series of limit switches are built with a strong but economical nylon fiberglass housing. All switches in the MEA Series are dust, water and oil resistant with an IP rating of IP65. The Actuator head can be rotated 360°. Supplied with M20 threaded entry.

- Variety of operating charactistics
- Wide choice of heads and actuators
- Captive cover screws
- Total plastic enclosure, light weight switches
- Dust proof, Oil-Tight, Water Resistant
- Temperature range -15° C to 70° C

Operating Speed	0.5mm to 50m/sec
Operating Frequency	Mechanical: 120 operations/min Electrical: 30 operations/min
Vibration	Malfunction durability: 10 to 55Hz; 1.5mm double amplitude
Shock	Mechanical durability: Approx 1km/sec² (approx 100 G's) Malfunction durability: Approx 300m/sec² (approx 30 G's)
Operating Temperature	-15°C to +70°C
Service Life	Mechanical: 10,000,000 operations (min) Electrical: 500,000 operations min (2A 110V AC)
Humidity	95% RH max
Electrical Contacts	1 NO + 1 NC 250V AC 6A / 125V DC 400mA (resistive)
Degree of protection	IP65



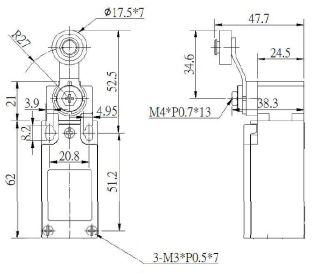

Part Number	Description
MEA-9104-G	Light Roller Arm



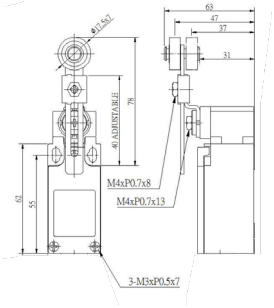

Part Number	Description
MEA-9108-G	Light Roller Arm without cable gland



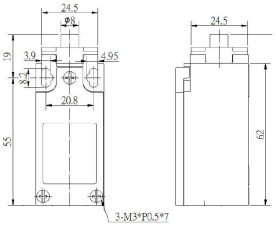

Part Number	Description
MEA-9111-G	Light Plunger



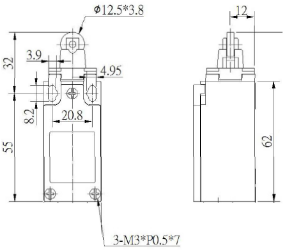

Part Number	Description
MEA-9112-G	Light Roller Plunger



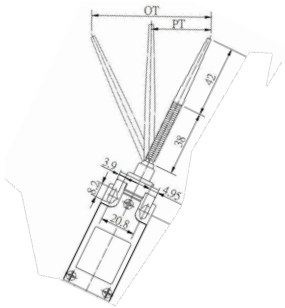

Part Number	Description
MEA-9166-G	Light Flexible Arm

Model	OF (max)	RF (min)	PT (max)	OT (min)	DT (max)	TT (min)
MEA-9104-G	300g	100g	20°	50°	12°	70°
MEA-9108-G	100g	40g	20°	50°	12°	70°
MEA-9111-G	500g	150g	2.0mm	4.0mm	1.0mm	5mm
MEA-9112-G	500g	150g	2.0mm	4.0mm	1.0mm	5mm
MEA-9166-G	60g	-	25°	50°	-	70°

OF = Operating Force, RF = Release Force, PT = Pre-Travel, OT = Over-Travel, DT = Differential Travel, TT = Total Travel

Switches Plus Components Pty Ltd
119-121 Rodeo Drive, Dandenong South, VIC, 3175
Phone: 1300 785 911
Email: sales@switchesplus.com.au

Limit Switches - ME Series

250V AC 5A, DPST, IP65, PBT, Zinc Alloy body, 1 NO + 1 NC, Snap-acting Switch

Rotary motion roller lever, and rod actuators, are adjustable through 360°. They may be set for operation clockwise, counter-clockwise, or in both directions. Operating heads can be positioned in any of the four 900 positions.

- Variety of operating charactistics
- Wide choice of heads and actuators
- Captive cover screws
- Dust proof, Oil-Tight, Water Resistant
- Temperature range -15° C to 70° C

Operating Speed	0.5mm to 50m/sec
Operating Frequency	Mechanical: 120 operations/min Electrical: 30 operations/min
Vibration	Malfunction durability: 10 to 55Hz; 1.5mm double amplitude
Shock	Mechanical durability: Approx 1km/sec² (approx 100 G's) Malfunction durability: Approx 300m/sec² (approx 30 G's)
Operating Temperature	-15°C to +70°C
Service Life	Mechanical: 10,000,000 operations (min) Electrical: 300,000 operations min (2A 110V AC)
Humidity	95% RH max
Electrical Contacts	1 NO + 1 NC 250V AC 5A / 115V DC 400mA (resistive)
Degree of protection	IP65

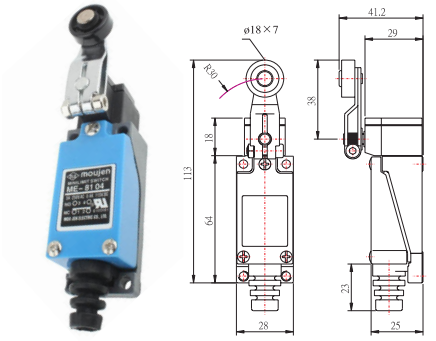

Part Number	Description
ME-8104	Roller Actuator

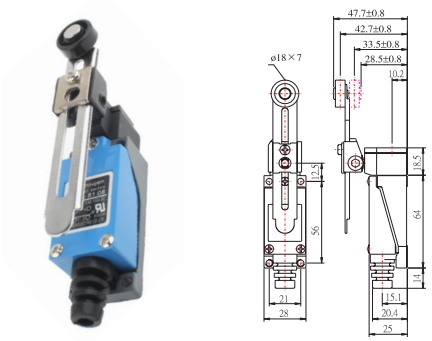

Part Number	Description
ME-8108	Adjustable Roller Actuator

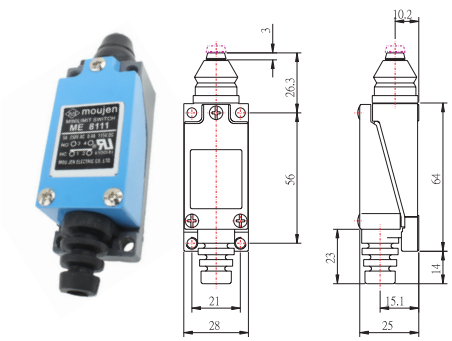

Part Number	Description
ME-8111	Plunger Type Actuator

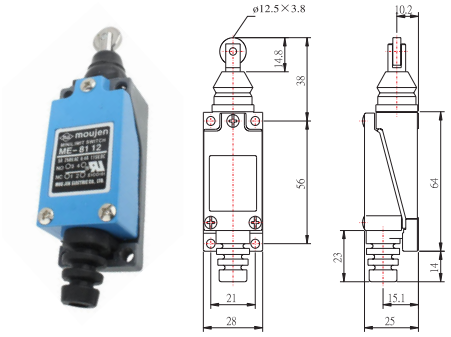

Part Number	Description
ME-8112	Roller Plunger Actuator

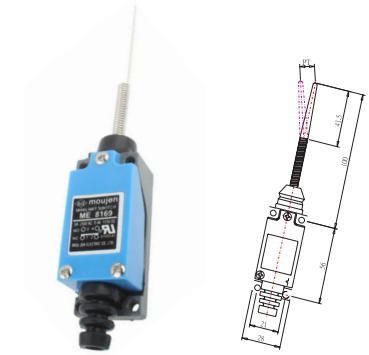

Part Number	Description
ME-8166	Flexible Rod Actuator

Model	OF (max)	RF (min)	PT (max)	OT (min)	DT (max)	TT (min)
ME-8104	600g	50g	20°	75°	10°	95°
ME-8108	340g	21g	20°	75°	10°	95°
ME-8111	900g	150g	1.5mm	4.0mm	0.7mm	5mm
ME-8112	900g	150g	1.5mm	4.0mm	0.7mm	5mm
ME-8166	90g	-	30mm	20mm	-	-

OF = Operating Force, RF = Release Force, PT = Pre-Travel, OT = Over-Travel, DT = Differential Travel, TT = Total Travel

Switches Plus Components Pty Ltd
119-121 Rodeo Drive, Dandenong South, VIC, 3175
Phone: 1300 785 911
Email: sales@switchesplus.com.au

Limit Switches - MJ Series

300V AC 10A, DPST, IP65, Aluminium Alloy body, 1 NO + 1 NC, Snap-acting Switch

The MJ series of limit switches from Moujen, feature a rigid diecast construction, and oil/water tight housing, and operates in temperatures of -10 to +80 degrees Celsius. This rugged series, offers a wide choice of actuators and comes with ½" conduit entry. The double contacts, 1NO/1NC, are rated at 10A/250VAC.

- Captive cover screws
- Dustproof. Oil-Tight, Water-Resistant
- Stainless steel essentials
- Temperature range -10° C to 80° C

Operating Speed	1mm to 2m/sec
Operating Frequency	Mechanical: 120 operations/min Electrical: 30 operations/min
Vibration	Malfunction durability: 10 to 55Hz; 1.5mm double amplitude
Shock	Mechanical durability: Approx 1km/sec² (approx 100 G's) Malfunction durability: Approx 300m/sec² (approx 30 G's)
Operating Temperature	-10°C to +80°C
Service Life	Mechanical: 15,000,000 operations (min) Electrical: 500,000 operations min (2.5A 110V AC)
Humidity	95% RH max
Electrical Contacts	1 NO + 1 NC Double Break Isolated 300V AC 10A / 125V DC 800mA (resistive)
Degree of protection	IP65

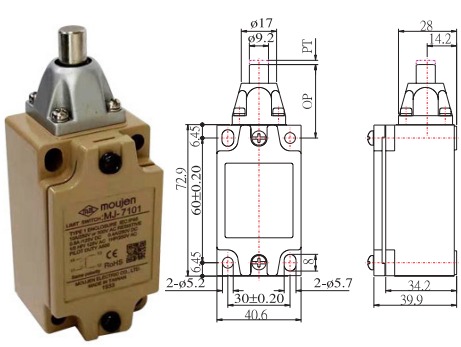

Part Number	Description
MJ-7101	Oil Tight Plunger Actuator

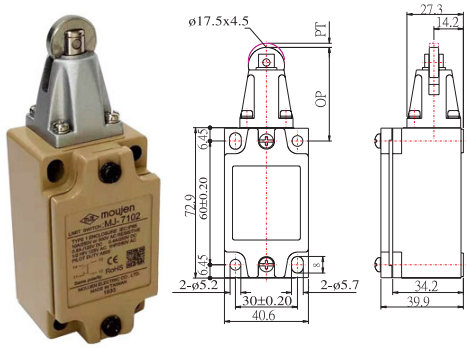

Part Number	Description
MJ-7102	Oil Tight Roller Plunger Actuator

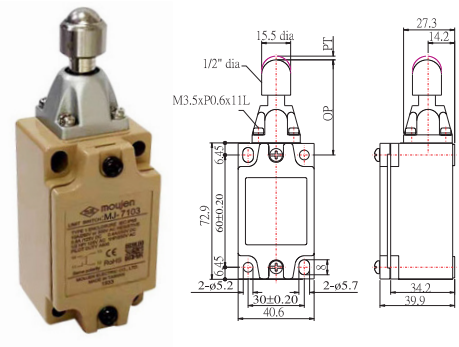

Part Number	Description
MJ-7103	Oil Tight Ball Plunger Actuator



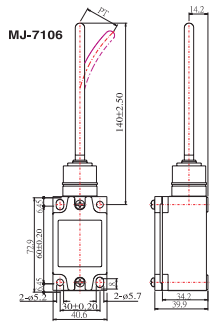

Part Number	Description
MJ-7106	Oil Tight Spring Arm Actuator



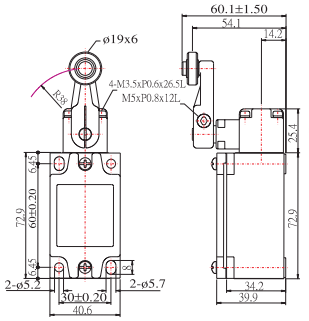

Part Number	Description
MJ-7104	450 Oil Tight Roller Actuator
MJ-7204	900 Oil Tight Roller Actuator



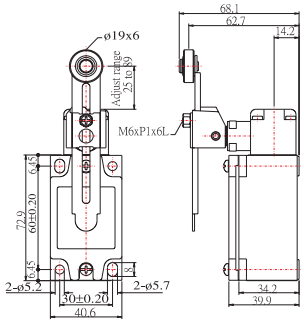

Part Number	Description
MJ-7108	450 Oil Tight Adjustable Roller
MJ-7208	900 Oil Tight Adjustable Roller

Model	OF (max)	RF (min)	PT (max)	OT (min)	DT (max)	OP	TT (min)
MJ-7101	2800g	900g	2.0mm	5.5mm	1.0mm	34 ± 0.8	-
MJ-7102	2800g	900g	2.0mm	5.5mm	1.0mm	44 ± 0.8	-
MJ-7103	2800g	900g	2.0mm	4.0mm	1.0mm	44.5 ± 0.8	-
MJ-7104	1400g	227g	15-20°	25°	12°	-	43°
MJ-7204	900g	50g	25-30°	60°	16°	-	90° + 10°
MJ-7106	150g	-	30°	-	-	-	-
MJ-7108	1400g	227g	15-20°	25°	12°	-	43°
MJ-7208	900g	50g	25-30°	60°	16°	-	90° + 10°

OF = Operating Force, RF = Release Force, PT = Pre-Travel, OT = Over-Travel, DT = Differential Travel, OP = Operation Position, TT = Total Travel

Switches Plus Components Pty Ltd
119-121 Rodeo Drive, Dandenong South, VIC, 3175
Phone: 1300 785 911
Email: sales@switchesplus.com.au

Crane & Hoist Pendants

IP65

Ergonomic Design
Designed for comfort and ease of use, reducing operator fatigue while ensuring durable, reliable performance in demanding environments.

Durable Build
Constructed with high-quality IP65 materials to withstand harsh conditions, providing long-lasting reliability for industrial lifting and lowering tasks.

Two-Speed Control (select models)
Offers precise operation for lifting heavy loads through dual-speed functionality, ensuring efficiency and safety in various lifting applications.






	2 Button		4 Button	
Type	Single Speed			
Controls	↓↑	↓↑ & E Stop	↑↓→←	↑↓→← & E Stop
Part Number	XACA281	XACA2713	XACA481	XACA4713






	6 Button	4 Button	6 Button	8 Button
Type	Single Speed	2 Speed		
Controls	↑↓→←↗↙ & E Stop	↑↓→← & E Stop	↑↓→←↗↙ & E Stop	↑↓→←↗↙ Ω Ω & E Stop
Part Number	XACA6713	XACA4913	XACA6913	XACA8913

Float Switches

IP6x, 1CO, 10A AC1

Part Number	Description
CB2005L5	Float Switch 1C/O 10 Amp AC1 w/– 5 Mtr Lead
CB2005L10	Float Switch 1C/O 10 Amp AC1 w/– 10 Mtr Lead
CB2005L20	Float Switch 1C/O 10 Amp AC1 w/– 20 Mtr Lead

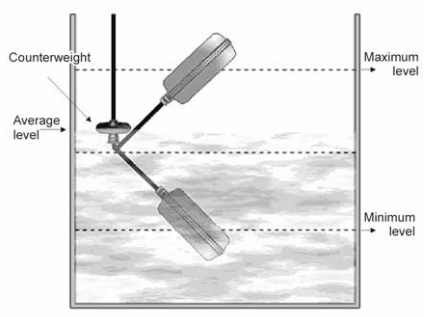



Switches Plus Components Pty Ltd
119-121 Rodeo Drive, Dandenong South, VIC, 3175
Phone: 1300 785 911
Email: sales@switchesplus.com.au

Switches

Toggle Switches

250V AC 15A, M12 thread, 17mm actuator

Toggle switches are indispensable components for controlling electrical circuits in a wide range of applications. Their simple operation, durability, and versatility make them ideal for use in industrial machinery, automotive systems, consumer electronics, aerospace, marine, home automation, and military settings. Choose toggle switches for reliable, efficient, and customizable control solutions in your electrical and electronic systems.

On = Maintained
(On) = Momentary

Function	Part Number	Poles				Termination		
		SPST	SPDT	DPST	DPDT	6.3 Quick Connect	Screw Connect	Bushing height
On-Off	L7-FP1-A3-B4-H5-15A			✓		✓		12.5
	L7-2P1-A3-B4-H5-15A	✓				✓		12.5
On-Off-On	L7-DP3-A3-B4-H5-15A				✓	✓		12.5
On-On	L7-DP1-A3-B4-H5-15A				✓			12.5
	L7-SP1-A3-B4-H5-15A		✓			✓		12.5
On-Off-(On)	L7-DPT-A3-B4-H5-15A				✓	✓		12.5
On-(On)	L7-SPA-A3-B4-H1-15A		✓				✓	12.5
(On)-Off-(On)	L7-SP4-A3-B4-H5-15A		✓			✓		12.5
	L7-DP4-A3-B4-H5-15A				✓	✓		12.5
(On)-Off	L7-FPA-A3-B4-H5-15A			✓		✓		12.5



Part Number	Description	Option
YS1306	Toggle Switch Guard	Plastic
WUN-0077	Toggle Switch Plate	On-Off
YE2A06	Black Toggle Boot	M12

Rocker Switches

Popular due to their reliability and ease of use

For this type of switch, the keyword is simplicity. With a single click, it allows the on-off function; basically all small household appliances (coffee machines, pressure washers, vacuum cleaners, ..) and in many industrial environments. We have a wide range of rocker switches available. Anti-spray solutions with PVC cover as well as various water protection systems are also available. Thanks to our experience, we can offer standard switches, but we also guarantee a very high level of customization, to adapt our solutions to all your needs and applicability. We carry a basic range in Australia, but subject to MOQ, we can find the exact solution for your application.

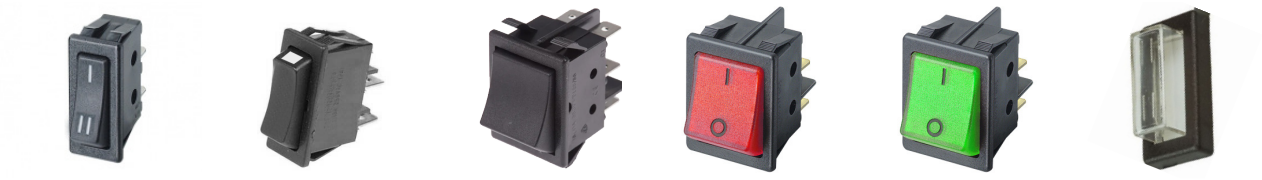

Indicator	I II	O i	Black Rocker	Red Neon - I O	Green Neon - I O	IP54 cover
Part Number	SX81113811220000	SX811118112X0032	8226002086	SX8211881G110000	SX8211881E110000	SX82CAP1
Rating (AC)	250V 16A	250V 20A	250V 16A	250V 16A	250V 16A	
Poles	SPDT	SPST	DPDT	DPST	DPST	Double pole
Function	On-On	On-Off	On-On	On-Off	On-Off	
Dimensions	30mm x 11mm	30mm x 11mm	30mm x 22mm	30mm x 22mm	30mm x 22mm	30mm x 22mm
Terminations	6.3mm Q/C	6.3mm Q/C	6.3mm Q/C	6.3mm Q/C	6.3mm Q/C	

Switches Plus Components Pty Ltd
119-121 Rodeo Drive, Dandenong South, VIC, 3175
Phone: 1300 785 911
Email: sales@switchesplus.com.au

Dome pushbuttons

Momentary action

The P9 Dome series is a quality precision switch designed for use in panels, control grips, computers, instruments, heavy equipment and other demanding applications where attractive, rugged pushbutton switches are required.

Compact Momentary Snap Action panel mount switches for wet and dusty environments with positive tactile feedback. Manufactured in the USA with a mechanical life expectancy of 1,000,000 operations and an electrical life of 25,000 operations at full rated load. The switch series, offers excellent mechanical and electrical performance while operating under severe conditions found in demanding applications.

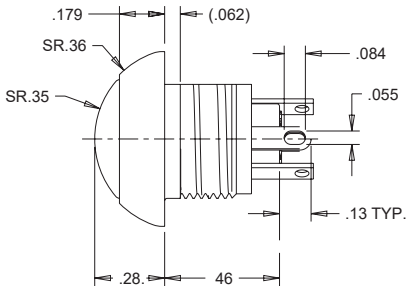



IP	Force	Red	Black	Orange	Yellow	Green	Blue
IP64	Standard	P9-113121	P9-113122	P9-113123	P9-113124	P9-113125	P9-113126



		Purple	Grey	White
IP64	Standard	P9-113127	P9-113128	P9-113129

Load	Ratings	
Resistive: 28VDC	4A	25,000 cycles
Resistive: 115VAC	1A	25,000 cycles
Inductive: 28VDC	2A	25,000 cycles
Logic Level	10mA @ 5 VDC	1,000,000 cycles
Operating Force:	Standard	1.7 lbs. +/- 0.5 lb
Thread	15/32-32	
Contacts	1NO + 1NC	



OTTO
Expect Excellence.

OTTO designs and manufactures precision switches and control grips including mechanical switches; Hall effect switches with digital and analog output options. OTTO's portfolio includes sealed and lighted high performance, snap action, rocker, pushbuttons and toggles as well as commercial and military control grips and Hall effect technology joysticks.

Our switches, joysticks and control grips perform every day in some of the toughest applications including heavy equipment, aerospace, marine, medical, communication and other demanding markets.

Visit www.otto-controls.com for more information.

Switches Plus Components Pty Ltd
119-121 Rodeo Drive, Dandenong South, VIC, 3175
Phone: 1300 785 911
Email: sales@switchesplus.com.au

119-121 Rodeo Drive, Dandenong South, VIC, 3175 P: 1300 785 911 E: sales@switchesplus.com.au W: www.switchesplus.com.au

119-121 Rodeo Drive, Dandenong South, VIC, 3175 P: 1300 785 911 E: sales@switchesplus.com.au W: www.switchesplus.com.au

SWITCHES PLUS COMPONENTS

Switches Plus Components Pty Ltd
119-121 Rodeo Drive,
Dandenong South, VIC, 3175
Phone: 1300 785 911
Email: sales@switchesplus.com.au

V 26.11.16