SWITCHES PLUS COMPONENTS

Transformers & Power Supplies

2027



Industrial electrical, automation and control products, including hard-to-source and specialist components, backed by technical expertise.

Switches Plus Components

SWITCHES PLUS COMPONENTS

Switches Plus Components is an Australian-owned specialist supplier of industrial electrical, control and automation products, supporting customers across Australia.

We've been working with switchboard builders, OEMs, machine builders, industrial electricians and engineers for more than 40 years, supporting projects where product selection, system integration and long-term performance all matter.

We act as the Australian distributor for over 40 suppliers, with over 10,000 items on our wesbite, and 5,000+ products stocked in our warehouse from leading global manufacturers, known for their quality, reliability and performance in industrial applications.

What We Do

We supply a broad range of industrial electrical, automation and control components suited to your application requirements, whether standard or specialist.

Our role extends beyond supplying part numbers. We focus on solving application challenges, ensuring product decisions align with system design, operating conditions and long-term performance requirements.

Access Specialist and Hard-to-Source Products

Not all projects align with standard, catalogue-based supply. Switches Plus supports applications where system constraints, integration requirements and operating conditions influence product selection. This includes sourcing specialist and hard-to-source components where only specific or niche products will meet the requirements of your application.

Work with a Technically Informed Team

Our team understands the industries our customers work in and how those environments shape product requirements. They work alongside you to provide practical technical input, so product decisions are based on what will perform in your application, not just what's available.

Industries and Applications

Switches Plus Components serves a wide range of customers and industries. Our customers include electrical contractors, switchboard builders, machine builders (OEMs), engineers and system integrators who work across many industries including:

- Defence
- Industrial automation
- Manufacturing plants
- Mining operations
- Utilities
- Infrastructure projects
- Renewable Energy
- Electrical Contractors

These are environments where product selection, technical input and operating conditions directly influence system performance and service life.

Our Mission

We make it easier for our customers to get the right industrial electrical, automation and control products for their application, so they can deliver reliable systems.

Our Vision

To contribute to reliable, well-performing industrial systems across the industries we support.

How We Work

We work from your application requirements
Product selection is guided by how your system is designed, built and expected to perform.

We focus on what will work in your application
Decisions are based on system requirements, operating conditions and long-term performance, not just availability.

We bring practical technical input
Our team understands the industries you work in and provides input that reflects how systems are built, installed and used.

We source beyond standard options when needed
We source components suited to your application, not limited to standard product ranges.

We work alongside you throughout the project
We respond quickly, communicate clearly and work with you to keep things moving.

National Coverage

Switches Plus Components supplies customers across Australia and New Zealand, supporting projects in metropolitan, regional and remote locations.

Contact Details

Phone: 1300 785 911
Email: sales@switchesplus.com.au
Web: switchesplus.com.au
Address: 119-121 Rodeo Drive,
Dandenong South, Victoria, 3175

Switches Plus Components

SWITCHES PLUS COMPONENTS

Our Brands

We work with a global network of suppliers, providing access to established brands used across industrial applications.

Product Range

We offer a wide range of industrial electrical components and automation solutions, from consumables through to specialised technical products. This includes both standard stocked products and specialist components sourced for applications where standard options do not meet your requirements.

Products are selected with compliance to relevant standards and appropriate IP ratings in mind, ensuring suitability for industrial environments and application requirements. Our product range includes:

- Automation Components
- Beacons & Alarms
- Cable
- Cable Management & Accessories
- Circuit Protection
- Connectors
- Contactors & Relays
- Enclosures
- Switches
- Terminals & Distribution Devices
- Timers & Monitoring Relays
- Transformers & Power Supplies

Switches Plus Components was established in 1997 through the strategic merger of C&K Electronics and Jesec Switches Plus. This union brought together more than 40 years of combined industry expertise, establishing our position as a market leader in electronic components.

A pivotal moment came in November 2012 when Switches Plus evolved from a traditional electronics components supplier into a comprehensive industrial solutions provider, transforming the company's trajectory and market presence. In February 2025, Switches Plus Components entered an exciting new chapter when it was acquired by Dore Electrics, a move that significantly strengthens the company's footprint in the Industrial Electrical and Automation market.

The partnership with Dore Electrics enhances our ability to deliver comprehensive electrical solutions while maintaining the high standards and customer-focused approach that has defined Switches Plus Components for over four decades.

Catalogues

Looking for something not in this catalogue? Don't worry, we have over 5000 stocked lines, and access to thousands more!











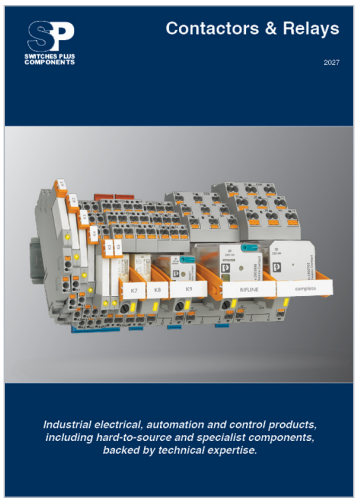



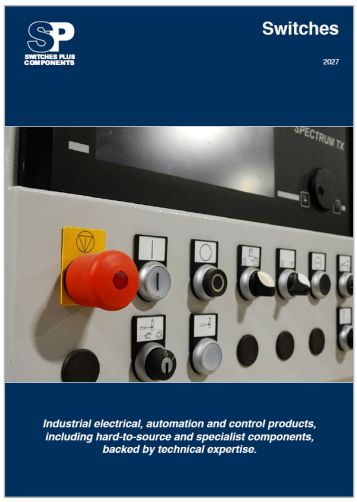

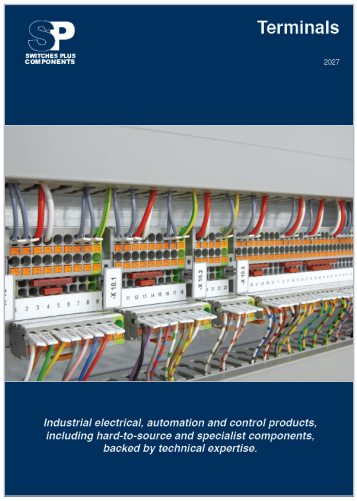





Contents

EMC Filters 11
EMC Filters 11

Power Supplies 6
ESSENTIAL Series 7
QUINT Series 8
STEP Series 6
TRIO Series 8
UNO Series 7

Redundancy Modules 10
Active Redundancy 10
Passive Redundancy 10

Transformers 12
Bell Transformers 12
Control Transformers 12

Uninterruptible Power Supplies 9
QUINT Series UPS 9

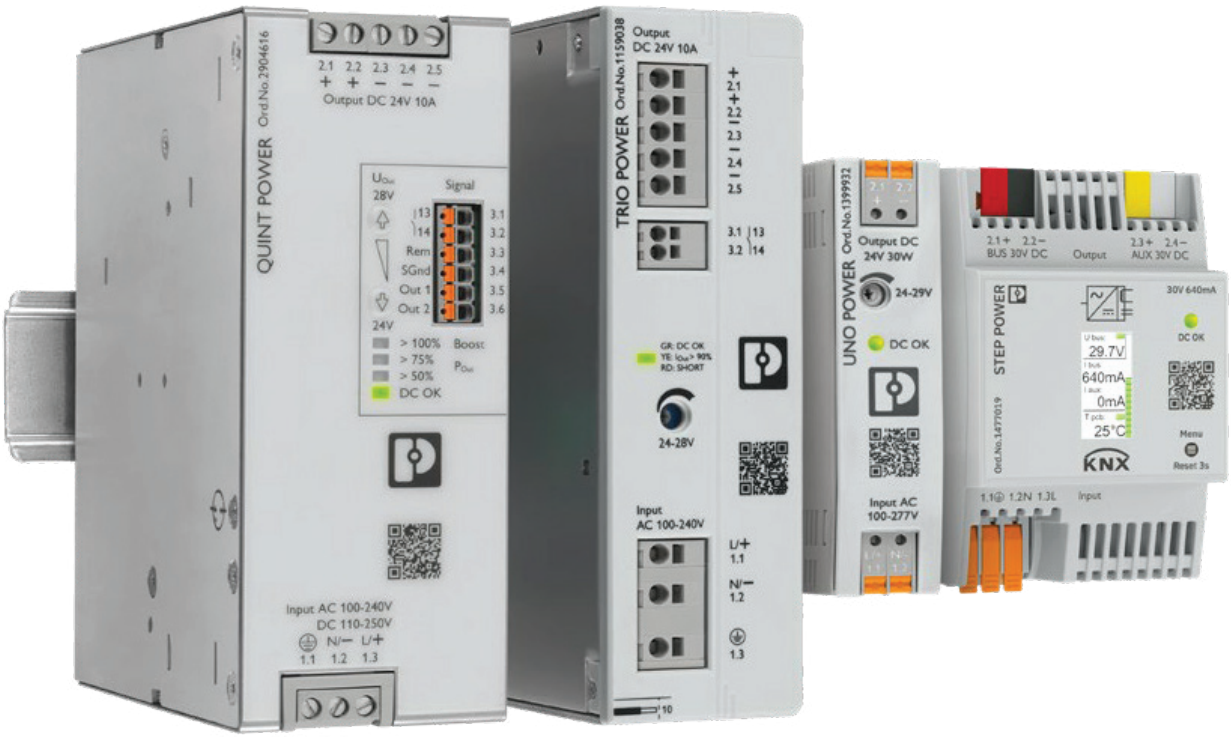

Switches Plus Components Pty Ltd
119-121 Rodeo Drive, Dandenong South, VIC, 3175
Phone: 1300 785 911
Email: sales@switchesplus.com.au

Power Supplies



Which power supply meets the requirements of your application? The load profile is a decisive criterion for selecting the right power supply.

Maximize the availability of your systems with our high-quality power supplies featuring leading technology. The product families differ with regard to their design, performance, and functionality. Select the ideal product family based on your needs. With their various functionalities, performance classes, and designs, our power supplies are the right partner for your application.

- **QUINT POWER: Automotive industry, systems manufacturing, process industry, railway and energy technology**
- **TRIO POWER: Machine building**
- **UNO POWER: Infrastructure**
- **ESSENTIAL POWER: Control & Automation**
- **STEP POWER: Building automation, e-mobility**

STEP Series

Modular design, DIN rail mounted

STEP POWER power supplies are optimally tailored to the needs of modern building automation – in both industrial and residential applications. The low no-load losses and high degree of efficiency ensure maximum energy efficiency and meet the requirements of Efficiency Level VI.









Output Power	15W	15W	60W	60W
Output Current	3 A	630 mA	5 A	2.5 A
Output Voltage	5V DC	24V DC	12V DC	24V DC
Input Voltage	100 - 240 V AC	100 - 240 V AC	100 - 240 V AC	100 - 240 V AC
Part Number	2320513	1088495	2868583	1088491

Switches Plus Components Pty Ltd
119-121 Rodeo Drive, Dandenong South, VIC, 3175
Phone: 1300 785 911
Email: sales@switchesplus.com.au

Power Supplies

ESSENTIAL Series

Industrial design, DIN rail mounted

The ESSENTIAL POWER power supplies provide a reliable supply for your system. Along with satisfying essential industry standards, the power supply units feature an international approval package, a wide temperature range, and a flexible wide range input. ESSENTIAL POWER is therefore suitable for worldwide use.






Output Power	75W	120W	240W	480W
Output Current	3.125 A	5 A	10 A	20 A
Output Voltage	24V DC	24V DC	24V DC	24V DC
Input Voltage	100 - 240 V AC	100 - 240 V AC	100 - 240 V AC	100 - 240 V AC
Part Number	1234301	1234302	1234304	1234308





Output Power	240W	480W	960W
Output Current	10 A	20 A	40 A
Output Voltage	24V DC	24V DC	24V DC
Input Voltage	3x 400 V AC ... 500 V AC	3x 400 V AC ... 500 V AC	3x 400 V AC ... 500 V AC
Part Number	1796909	1796910	1796912

UNO Series

Industrial design, DIN rail mounted

With their high power density, UNO POWER power supplies are the perfect solution, particularly in compact control cabinets for central and decentral installations. The efficient technology in a small housing covers loads from 25 W to 960 W with low no-load losses and high efficiencies.






Output Power	30W	60W	100W	240W
12V DC	2902998		2902997	
15V DC	2903000			
24V DC	2902991	2902992	2902993	1096432
48V DC		2902995	2902996	1110155

Switches Plus Components Pty Ltd
119-121 Rodeo Drive, Dandenong South, VIC, 3175
Phone: 1300 785 911
Email: sales@switchesplus.com.au

Power Supplies

TRIO Series

Industrial design, DIN rail mounted

Our TRIO POWER power supplies are the ideal solution for machine building. Compact, robust, and always reliable: The TRIO POWER power supply sets the new standard in machine building. The Plug and Play solution for the control cabinet: simply unpack, connect, and you're done! All TRIO POWER power supplies feature smart diagnostics with multicolor LEDs and a collective signal contact. This is used to signal all relevant states such as DC OK, overload, and short circuit.

- Space-saving due to its low overall width and capability of being mounted directly side by side
- Robust and reliable due to dynamic boost with a powerful output characteristic curve
- Easy handling with Push-in connection technology
- Smart diagnostics with multicolor LEDs and collective relay contact for a clear status display, with optional IO-Link
- High system availability: supply and protection in one device due to the integrated multichannel circuit breaker






Output Power	75W	120W	240W	480W
Output Current	3A	5A	10A	20A
Output Voltage	24V DC	24V DC	24V DC	24V DC
Input Voltage	100-240V AC/DC	100-240V AC/DC	100-240V AC/DC	100-240V AC/DC
Part Number	1362785	1159037	1159038	1159039

QUINT Series

Industrial design, DIN rail mounted

Powerful QUINT POWER power supplies ensure maximum availability of your system with various functions in different power ranges. Whether with SFB Technology, individual settings, and an integrated gas discharge tube, or in a space- and energy-saving version with different connection methods – QUINT POWER reliably safeguards the supply to your system.

- SFB Technology trips standard miniature circuit breakers selectively. Loads connected in parallel continue working
- Preventive function monitoring reports critical operating states before errors occur
- Power reserve for easy system expansion with static boost, providing sustained power of up to 125%. Starting of difficult loads with a dynamic boost of up to 200% for 5 s
- High level of immunity with integrated gas discharge tube and mains failure buffer time of more than 20 ms
- Robust design in metal housing and a wide temperature range from -40°C to +70°C
- Power supplies with maximum functionality are part of the COMPLETE line system






Output Power	120W	240W	480W	960W
Output Current	5A	10A	20A	40A
Output Voltage	24V DC	24V DC	24V DC	24V DC
Input Voltage	100-240V AC/DC	100-240V AC/DC	100-240V AC/DC	100-240V AC/DC
Part Number	2904600	2904601	2904602	2904603

Switches Plus Components Pty Ltd
119-121 Rodeo Drive, Dandenong South, VIC, 3175
Phone: 1300 785 911
Email: sales@switchesplus.com.au

Uninterruptible Power Supplies

QUINT Series UPS

24V DC

Combine the QUINT POWER power supply with the intelligent QUINT DC UPS to create an uninterruptible 24 V supply system that provides all data from the power supply right through to the battery. The QUINT DC UPS provides interfaces and protocols for different industrial networks. The corresponding software packages for the PLCnext, TIA Portal, Studio 5000, and TwinCAT engineering environments are included. The POWER MANAGEMENT SUITE software can be used for function monitoring and configuration of the entire system.



Comms	5A	10A	20A	40A
None	2906990	2907066	2907071	2907077
USB	2906991	2907067	2907072	2907078
Ethernet IP	2906994	2907069	2907074	2907080
Profinet	2906993	2907068	2607073	2907079
Ethercat	2906996	2907070	2907076	2907081

UPS Energy Storage Selection using PB Batteries



Capacity	1.2 Ah	4 Ah	7 Ah	12 Ah	20 Ah	40 Ah	110 Ah
Dimensions (mm)	54 x 157 x 113	85 x 191 x 110	135 x 202 x 110	202 x 202 x 110	155 x 168 x 183	333 x 173 x 199	350 x 214 x 332
Part Number	1274520	1274117	1274118	1274119	1348516	1354641	1474660
Selection							

Buffer times for your QUINT DC UPS with PB battery module:

Select your battery module for your 24V DC applications here. Example: 7 A is to be buffered for 45 minutes.

QUINT4-UPS/24DC/24DC/10A and UPS-BAT/PB/24DC/12AH

Load Current	Buffer Time: Minutes 1	2	3	4	5	6	7	8	9	10	20	30	40	45	50	Hours 1	2	3	4	5	6	7	8	9	10	12	14	16	18	20	50	100
1 A																														2x	
2 A																													2x		
3 A																												2x	2x	2x		
5 A																								2x	2x	2x	2x	2x				
7 A																				2x	2x	2x	2x	2x	2x							
10 A																			2x	2x	2x	2x	2x									
15 A																	2x	2x	2x													
20 A																	2x	2x														
25 A																	2x															
30 A																2x																
35 A														2x	2x	2x																
40 A													2x	2x	2x	2x																

2x: In this case, two battery modules of the same capacity are required. The data is based on an ambient temperature of +25 °C at start of use.

Switches Plus Components Pty Ltd
119-121 Rodeo Drive, Dandenong South, VIC, 3175
Phone: 1300 785 911
Email: sales@switchesplus.com.au

Redundancy Modules

A redundancy module is used to decouple two power supplies and ensures the high availability and productivity of your system. A redundant power supply is particularly necessary in applications with stringent demands regarding operational safety. A redundant system ensures that the failure of one power supply unit does not result in system downtime.

Passive Redundancy

Diode

A diode module reliably decouples power supplies that are operated in parallel and ensures the high availability of your application. This means that a short circuit no longer affects the load. Thanks to simple decoupling with diodes, diode modules ensure absolute security of supply, both at the output of one of the power supply units and in the supply line from the power supply unit to the diode.

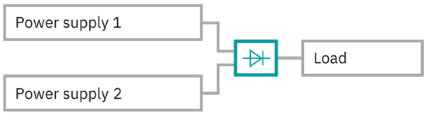







	UNO-DIODE/5-24DC/2X10/1X20	TRIO2-DIODE/12-24DC/2X10/1X20	TRIO2-DIODE/12-24DC/2X20/1X40
Input/Output Voltage	5-24V DC	12-24V DC	
Input Current	2 x 10A	2 x 10A	2 x 20A
Output Current Increased Power	20A	20A	40A
Output Current Redundancy	2 x 10A	2 x 10A	2 x 20A
Part Number	2905489	2907380	2907379

Active Redundancy

MOSFET

The QUINT ORING modules with ACB Technology ensure the balanced utilization of the power supply units, thus doubling the service life of your redundantly operated power supplies.

In a system consisting of two QUINT POWER power supplies and one QUINT ORING, the input voltage, output current, and decoupling section are monitored continuously. Any loss of redundancy is therefore highlighted early on. Furthermore, the redundancy modules feature OVP (overvoltage protection). This protects the load from voltages >32 V DC and therefore ensures maximum system availability for all possible systems.

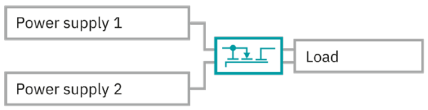







	QUINT4-ORING/12-24DC/2X10/2X10	QUINT4-ORING/12-24DC/2X20/2X20	QUINT-ORING/24DC/2X40/1X80
Input/Output Voltage	12-24V DC		18-24V DC
Input Current	2 x 10A	2 x 20A	2 x 40A
Output Current Increased Power	20A	40A	80A
Output Current Redundancy	2 x 10A	2 x 20A	2 x 40A
Part Number	1088206	1088207	2902879

Switches Plus Components Pty Ltd
119-121 Rodeo Drive, Dandenong South, VIC, 3175
Phone: 1300 785 911
Email: sales@switchesplus.com.au

EMC Filters
DIN rail mounted

EMC filters limit high-frequency interference voltages and currents generated by equipment during normal operation and occurring under fault conditions. Using our EMC filters, you ensure smooth operation in environments subject to interference.

Frequency converters, switching power supplies, and lighting system drivers are often sources of interference in power grids. Some of the EMC interference is mitigated directly at the sources of interference by special filter circuits. However, the remaining interference can propagate and amplify via the supply and control lines. This can have unpredictable effects on controllers, power supplies, sensors, and actuators. Our filters limit the interference directly in front of the potentially susceptible equipment or the sensitive end devices..

- SFP2: Effective protection against high-frequency interferences and transient overvoltages, ensured by surge protection circuits acting on the input and output side of the filter
- User-friendly handling with easy assembly and installation, either with Push-in or screw connection technology
- FIL: Improved filter effect and EMC-optimized installation with additional PE terminals for separate connection to the local equipotential bonding system
- Space-saving and cost-effective thanks to DIN rail mounting
- Reliable and safe system operation with a reduction of conducted, high-frequency interferences









	FIL-1S-1-20A-230AC-UT	FIL-1S-1-20A-230AC-PT	SFP2-1S-1-20A-230AC-UT	SFP2-1S-1-20A-230AC-PT
Screw	1292318		1292605	
Push-in		1292316		1292413
Current (max)	20A			
Voltage (max)	220V DC / 230V AC			

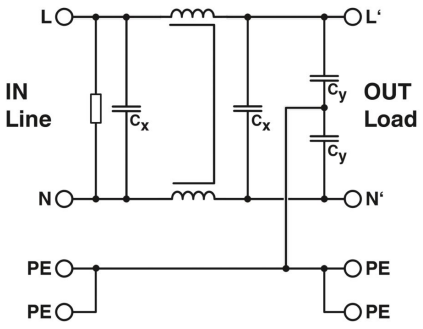

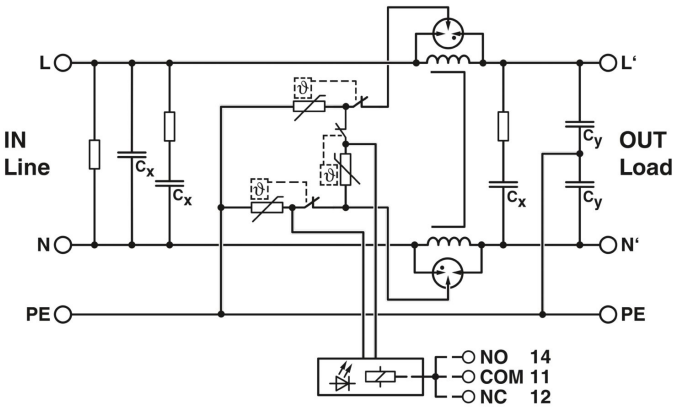

Conventional filters only protect against high-frequency interferences, but not against overvoltage pulses. For effective protection, additional surge protection components are needed. SFP2 filters provide effective protection against surges and high-frequency interference as they feature a surge protection circuit that protects both the input and output side of the filter.

The connection of the interference suppression filters to the local protective bonding is realized by additional PE terminal points. This improves the filter effect for high-frequency interferences between the active conductors and the ground potential. This way, an EMC-optimized installation and an improved protective effect is also achieved for EMC filters in plastic housings.

Thanks to the simple DIN rail mounting and the variable connection technology, using the filters in the control cabinet is child's play. Choose between the fast Push-in connection technology or proven screw connections for connecting the interference suppression filters.

Switches Plus Components Pty Ltd
119-121 Rodeo Drive, Dandenong South, VIC, 3175
Phone: 1300 785 911
Email: sales@switchesplus.com.au

Transformers

Bell Transformers

Isolated windings, DIN rail mounted

- Din rail mountable bell transformer
- Includes PTC
- Protection Class IP40
- Isolated windings







Power	15 VA	30 VA	63 VA
Secondary Voltage	4 - 8 - 12V	12 - 24 V	12 - 24 V
Secondary Current	1.25A	1.25A	5.25A / 2.62A
Width	35mm	53.5mm	105mm
Primary Voltage	220-240V AC		
Part Number	BZ326577A	BZ326578A	BZ326579A

Control Transformers

Isolated windings

Industrial Control Transformers provide a low and safe control voltage for the operation of electromagnetic devices such as motor starters, contactors, solenoids, timers or control boards.



Part Number	Power	Secondary Voltage	Primary Voltage
JBK5-40VA	40 VA	12 / 24 V AC	415 / 240 VAC
JBK5-63VA	63 VA		
JBK5-100VA	100 VA		
JBK5-160VA (415/240-12/24)	160 VA		
JBK5-160VA (415-240/240-110)	160 VA	240 / 110 V AC	
JBK5-250VA	250 VA	12 / 24 V AC	
JBK5-400VA	400 VA		
JBK5-500VA	500 VA		
JBK5-630VA	630 VA		

Switches Plus Components Pty Ltd
119-121 Rodeo Drive, Dandenong South, VIC, 3175
Phone: 1300 785 911
Email: sales@switchesplus.com.au

119-121 Rodeo Drive, Dandenong South, VIC, 3175 P: 1300 785 911 E: sales@switchesplus.com.au W: www.switchesplus.com.au

119-121 Rodeo Drive, Dandenong South, VIC, 3175 P: 1300 785 911 E: sales@switchesplus.com.au W: www.switchesplus.com.au

119-121 Rodeo Drive, Dandenong South, VIC, 3175 P: 1300 785 911 E: sales@switchesplus.com.au W: www.switchesplus.com.au

SWITCHES PLUS COMPONENTS

Switches Plus Components Pty Ltd
119-121 Rodeo Drive,
Dandenong South, VIC, 3175
Phone: 1300 785 911
Email: sales@switchesplus.com.au

V 26.11.16